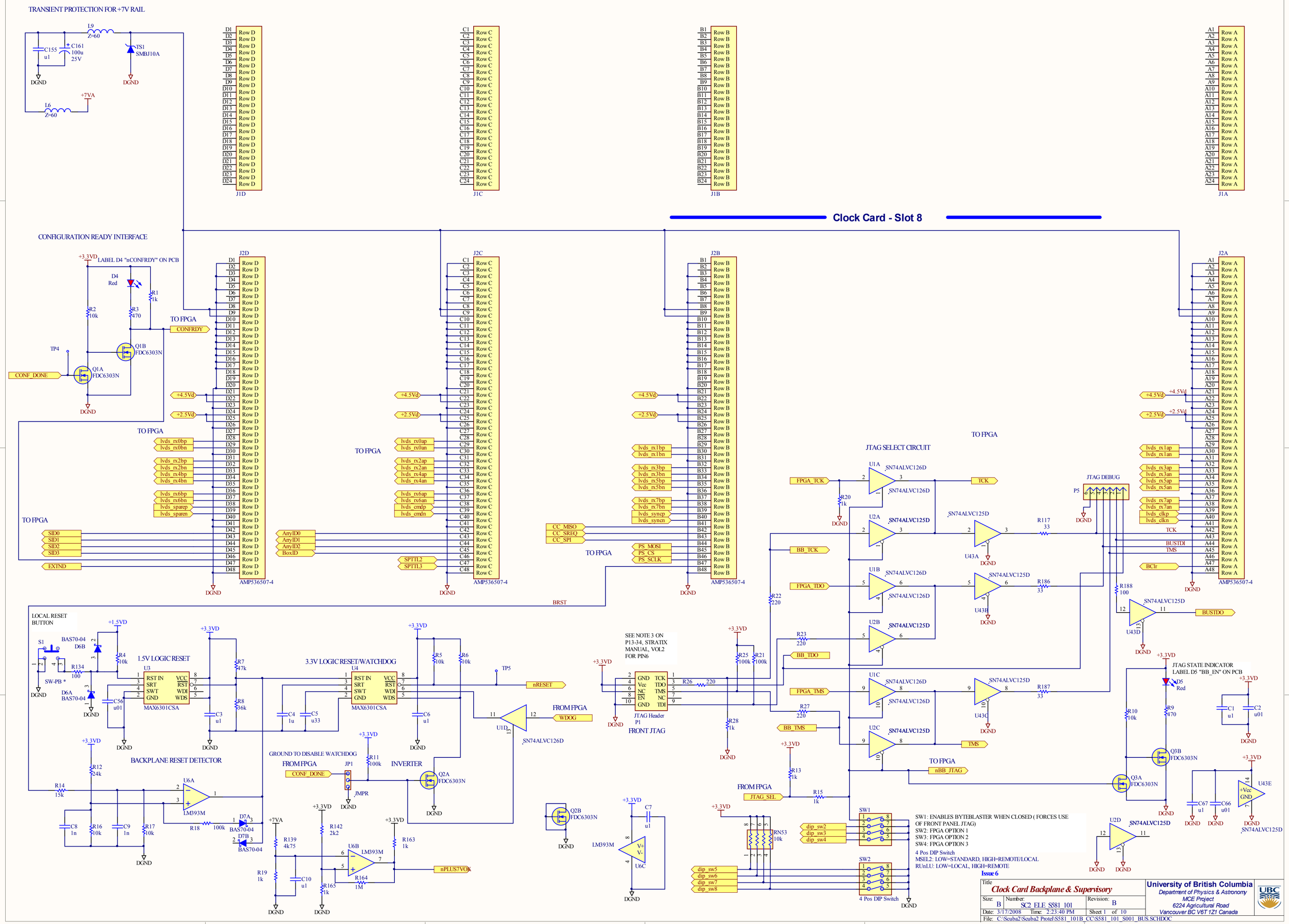

University of British Columbia
Department of Physics & Astronomy
MCE Project
6224 Agricultural Road
Vancouver BC V6T 1Z1 Canada

Title: Clock Card Backplane & Supervisory
Size: B | Number: SC2_ELE_S581_101 | Revision: B
Date: 3/17/2008 | Time: 2:23:40 PM | Sheet 1 of 10
File: C:\Scuba2\Scuba2 Protel\S581_101B_CC\S581_101_S001_BUS.SCHDOC

TO-220 Heatsink Assembly

M3 x 16mm Philips Pan Head Screw
Type: Hardware
Manufacturer: Pacific Fastener
Part Number:
Mech17

3mm SS Hex Nut
Type: Hardware
Manufacturer: Pacific Fastener
Part Number:
Mech23

#6 Spring Washer
Manufacturer: Pacific Fastener
Part Number:
Mech1

#6 Spring Washer
Manufacturer: Pacific Fastener
Part Number:
Mech9

#6 x 0.125 Al Spacer
Manufacturer: Pacific Fastener
Part Number:
Mech13

#6 x 0.125 Al Spacer
Manufacturer: Pacific Fastener
Part Number:
Mech5

3W TO-220 Heatsink
Manufacturer: Wakefield
Part Number: 273AB
HS1

TO-220 Heatsink Assembly

M3 x 16mm Philips Pan Head Screw
Type: Hardware
Manufacturer: Pacific Fastener
Part Number:
Mech18

3mm SS Hex Nut
Type: Hardware
Manufacturer: Pacific Fastener
Part Number:
Mech24

#6 Spring Washer
Manufacturer: Pacific Fastener
Part Number:
Mech2

#6 Spring Washer
Manufacturer: Pacific Fastener
Part Number:
Mech10

#6 x 0.125 Al Spacer
Manufacturer: Pacific Fastener
Part Number:
Mech14

#6 x 0.125 Al Spacer
Manufacturer: Pacific Fastener
Part Number:
Mech6

3W TO-220 Heatsink
Manufacturer: Wakefield
Part Number: 273AB
HS2

16 Pin DIP IC Socket
Manufacturer: Mill-Max
Part Number: 110-93-316-41-001
Socket1

16 Pin DIP IC Socket
Manufacturer: Mill-Max
Part Number: 110-93-316-41-001
Socket2

16 Pin DIP IC Socket
Manufacturer: Mill-Max
Part Number: 110-93-316-41-001
Socket3

16 Pin DIP IC Socket
Manufacturer: Mill-Max
Part Number: 110-93-316-41-001
Socket3

Use Loctite on Voltage Regulators Screw
Manufacturer:
Part Number:
Assembly1

Use Heatsink Compound on Voltage Regulators
Manufacturer:
Part Number:
Assembly2

Socket4

Note for Socket 4:

8 Pin 2x4 0.1" Header Machined Pins with manuf # modified from 410-93-210-41-001

Front Panel Mouting Assembly

Mech3

Mech4

Mech8

SC2-MEC-S581-111
000655 MEC
Fiber Optic Spacer Plate
Mech7

Mech11

Mech12

Mech15

Mech16

Mech19

Mech20

Mech21

Mech22

M1-M4 are mounting holes
ECO0025 change to free pads on PCB

M1 M2 M3 M4
DGND DGND DGND DGND

Add Fiducial Point
Add Fiducial Point
PCB Part Number for BOM: SC2-ELE-S581-101
Issue 6

Title: *Clock Card Mechanical Hardware*			**University of British Columbia** *Department of Physics & Astronomy* *MCE Project* *6224 Agricultural Road* *Vancouver BC V6T 1Z1 Canada*
Size: B	Number: SC2_ELE_S581_101	Revision: B	
Date: 3/17/2008	Time: 2:23:41 PM	Sheet 10 of 10	
File: S581_101_S009_MECH.SchDoc			

BUS INTERFACES

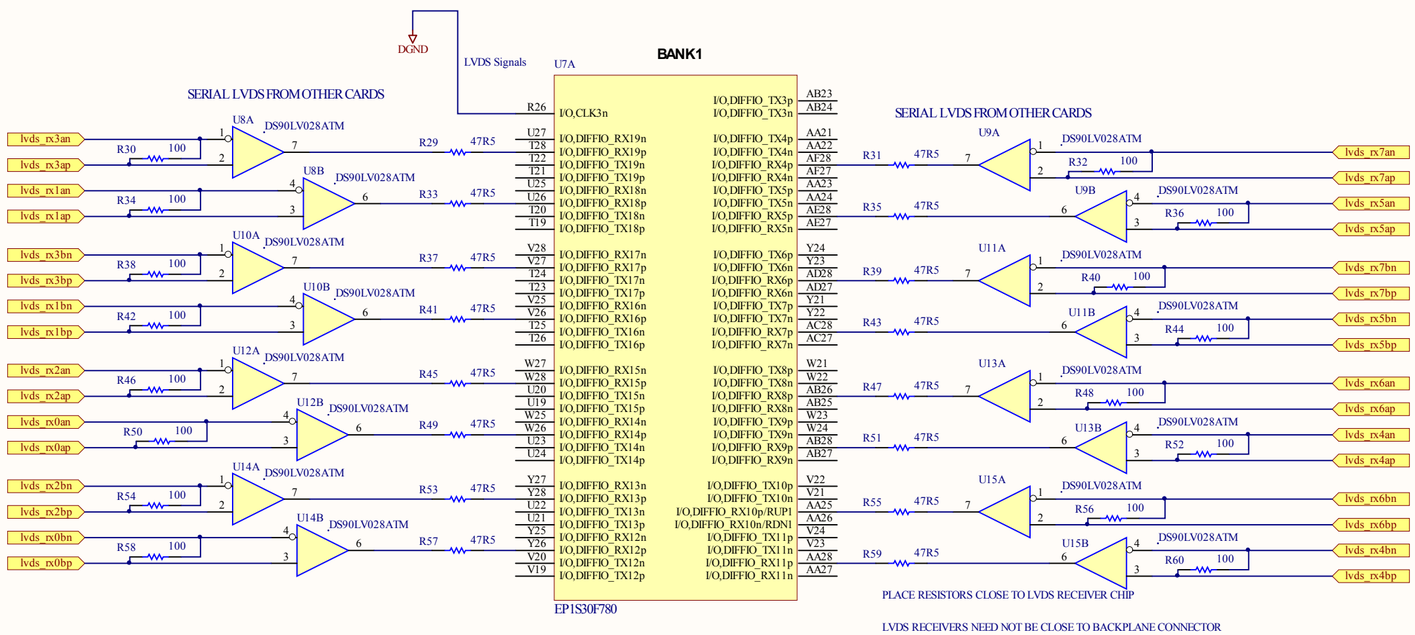

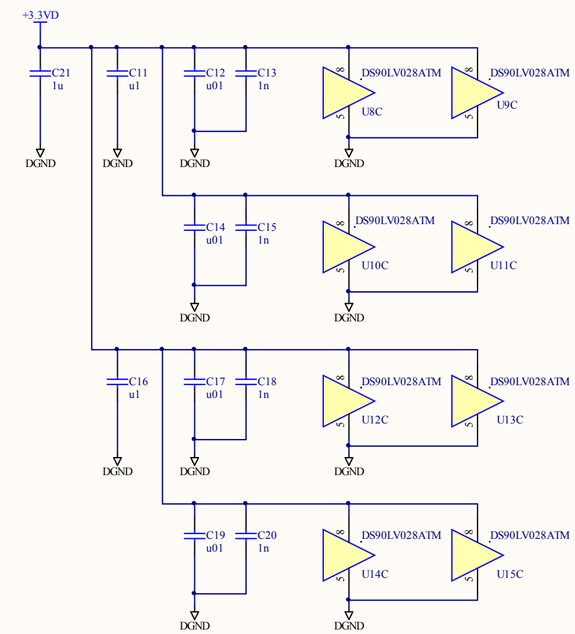

Issue 6

Title: *Clock Card LVDS Bus Interface*			University of British Columbia Department of Physics & Astronomy MCE Project 6224 Agricultural Road Vancouver BC V6T 1Z1 Canada
Size: C	Number: SC2_ELE_S581_101	Revision: B	
Date: 3/17/2008 Time: 2:23:41 PM		Sheet 2 of 10	
File: C:\Scuba2\Scuba2 Protel\S581_101B_CC\S581_101_S002_LVDS.SCHDOC			

NOTES:

1. DNP = DO NOT POPULATE

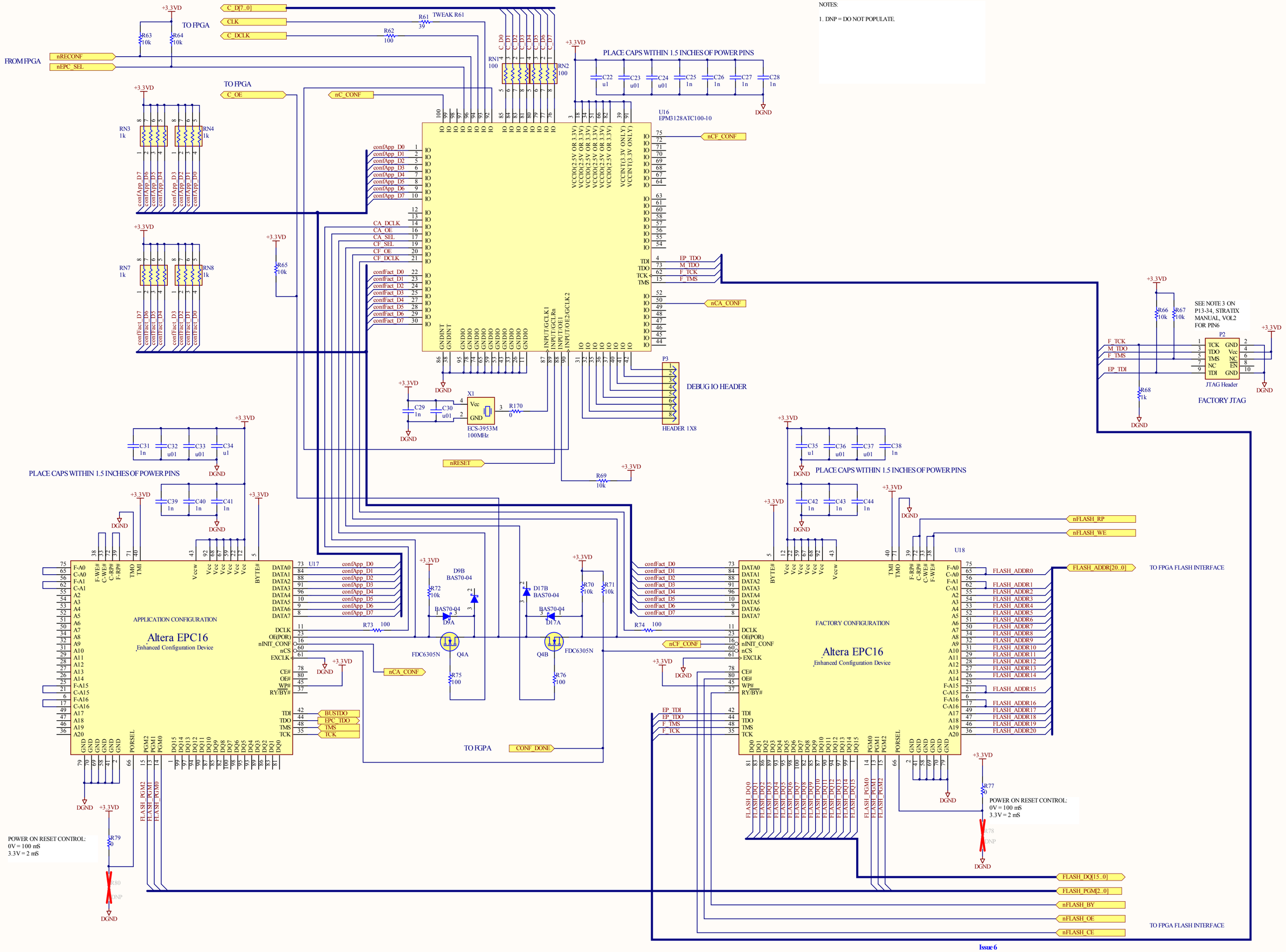

Issue 6

Title: *Clock Card FPGA Configuration*		**University of British Columbia**
Size: B	Number: SC2_ELE_S581_101	Revision: B
Date: 3/17/2008 Time: 2:23:41 PM	Sheet 3 of 10	*Department of Physics & Astronomy*
File: C:\Scuba2\Scuba2 Protel\S581_101B_CC\S581_101_S003_CONFIG.SCHDOC		*MCE Project*
		6224 Agricultural Road
		Vancouver BC V6T 1Z1 Canada

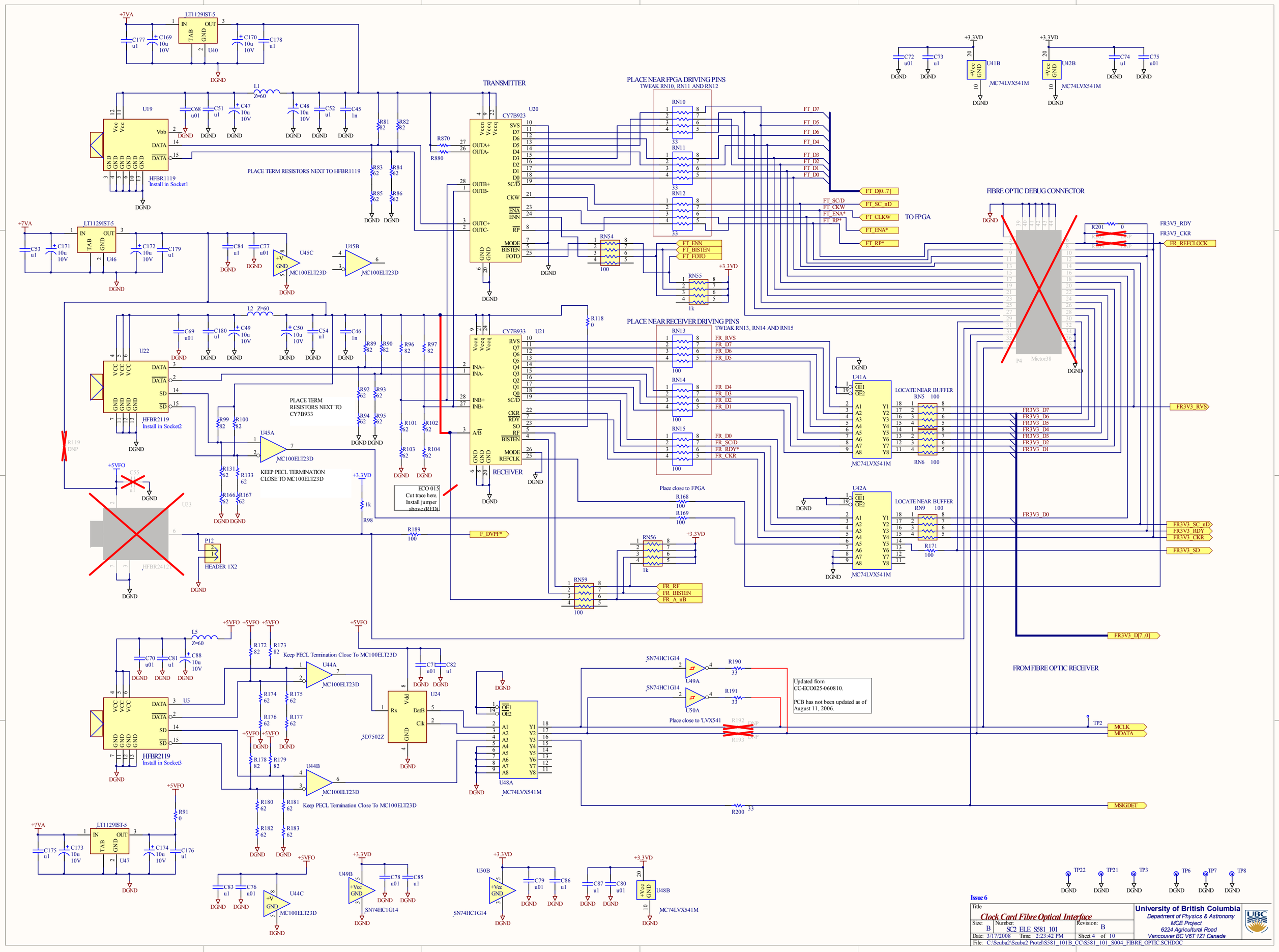
TRANSMITTER
RECEIVER
PLACE NEAR FPGA DRIVING PINS
TWEAK RN10, RN11 AND RN12
PLACE NEAR RECEIVER DRIVING PINS
TWEAK RN13, RN14 AND RN15
TO FPGA
FIBRE OPTIC DEBUG CONNECTOR
FROM FIBRE OPTIC RECEIVER
PLACE TERM RESISTORS NEXT TO HFBR1119
PLACE TERM RESISTORS NEXT TO CY7B933
KEEP PECL TERMINATION CLOSE TO MC100ELT23D
Keep PECL Termination Close To MC100ELT23D
LOCATE NEAR BUFFER
Place close to FPGA
Place close to 'LVX541
ECO 015
Cut trace here.
Install jumper above (RED).
Updated from CC-ECO025-060810.
PCB has not been updated as of August 11, 2006.
HFBR1119
Install in Socket1
HFBR2119
Install in Socket2
HFBR2119
Install in Socket3
HEADER 1X2
Issue 6
Clock Card Fibre Optical Interface
Size: B
Number: SC2_ELE_S581_101
Revision: B
Date: 3/17/2008
Time: 2:23:42 PM
Sheet 4 of 10
File: C:\Scuba2\Scuba2 Protel\S581_101B_CC\S581_101_S004_FIBRE_OPTIC.SCHDOC
University of British Columbia
Department of Physics & Astronomy
MCE Project
6224 Agricultural Road
Vancouver BC V6T 1Z1 Canada

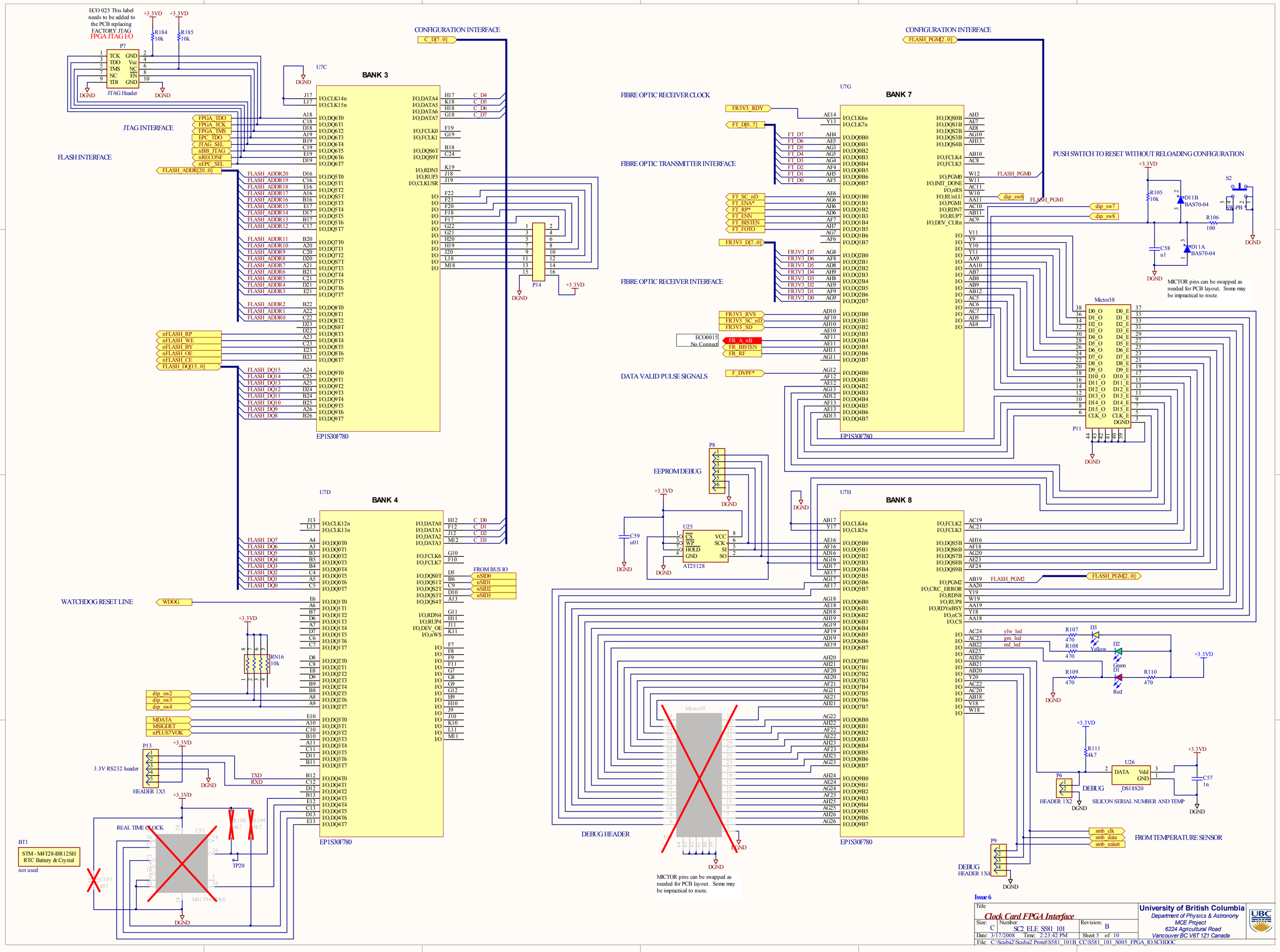
ECO 025 This label needs to be added to the PCB replacing FACTORY JTAG
FPGA JTAG I/O
P7
JTAG Header
R184 10k
R185 10k
+3.3VD
DGND
JTAG INTERFACE
FLASH INTERFACE
CONFIGURATION INTERFACE
C_D[7..0]
U7C
BANK 3
EP1S30F780
P14
U7D
BANK 4
EP1S30F780
FROM BUS IO
WATCHDOG RESET LINE
WDOG
RN16 10k
dip_sw2
dip_sw3
dip_sw4
MDATA
MSIGDET
nPLUS7VOK
P13
3.3V RS232 header
HEADER 1X5
TXD
RXD
REAL TIME CLOCK
U51
M41T94/M46E
R198 4k7
R199 4k7
TP20
BT1
STM - M4T28-BR12SH
RTC Battery & Crystal
not used
C181 u01
FIBRE OPTIC RECEIVER CLOCK
FIBRE OPTIC TRANSMITTER INTERFACE
FIBRE OPTIC RECEIVER INTERFACE
DATA VALID PULSE SIGNALS
ECO0015 No Connect
CONFIGURATION INTERFACE
FLASH_PGM[2..0]
U7G
BANK 7
EP1S30F780
PUSH SWITCH TO RESET WITHOUT RELOADING CONFIGURATION
R105 10k
D11B BAS70-04
S2
SW-PB
R106 100
C58 u1
D11A BAS70-04
MICTOR pins can be swapped as needed for PCB layout. Some may be impractical to route.
Mictor38
P11
EEPROM DEBUG
P8
U25
AT25128
C59 u01
U7H
BANK 8
EP1S30F780
R107 470
R108 470
R109 470
R110 470
D3 Yellow
D2 Green
D1 Red
R111 4k7
U26
DS18S20
P6
HEADER 1X2
DEBUG
SILICON SERIAL NUMBER AND TEMP
C57 1n
FROM TEMPERATURE SENSOR
DEBUG HEADER
DEBUG HEADER 1X4
Issue 6
Title
Clock Card FPGA Interface
Size: C
Number: SC2_ELE_S581_101
Revision: B
Date: 3/17/2008
Time: 2:23:42 PM
Sheet 5 of 10
File: C:\Scuba2\Scuba2 Protel\S581_101B_CC\S581_101_S005_FPGA_IO.SCHDOC
University of British Columbia
Department of Physics & Astronomy
MCE Project
6224 Agricultural Road
Vancouver BC V6T 1Z1 Canada

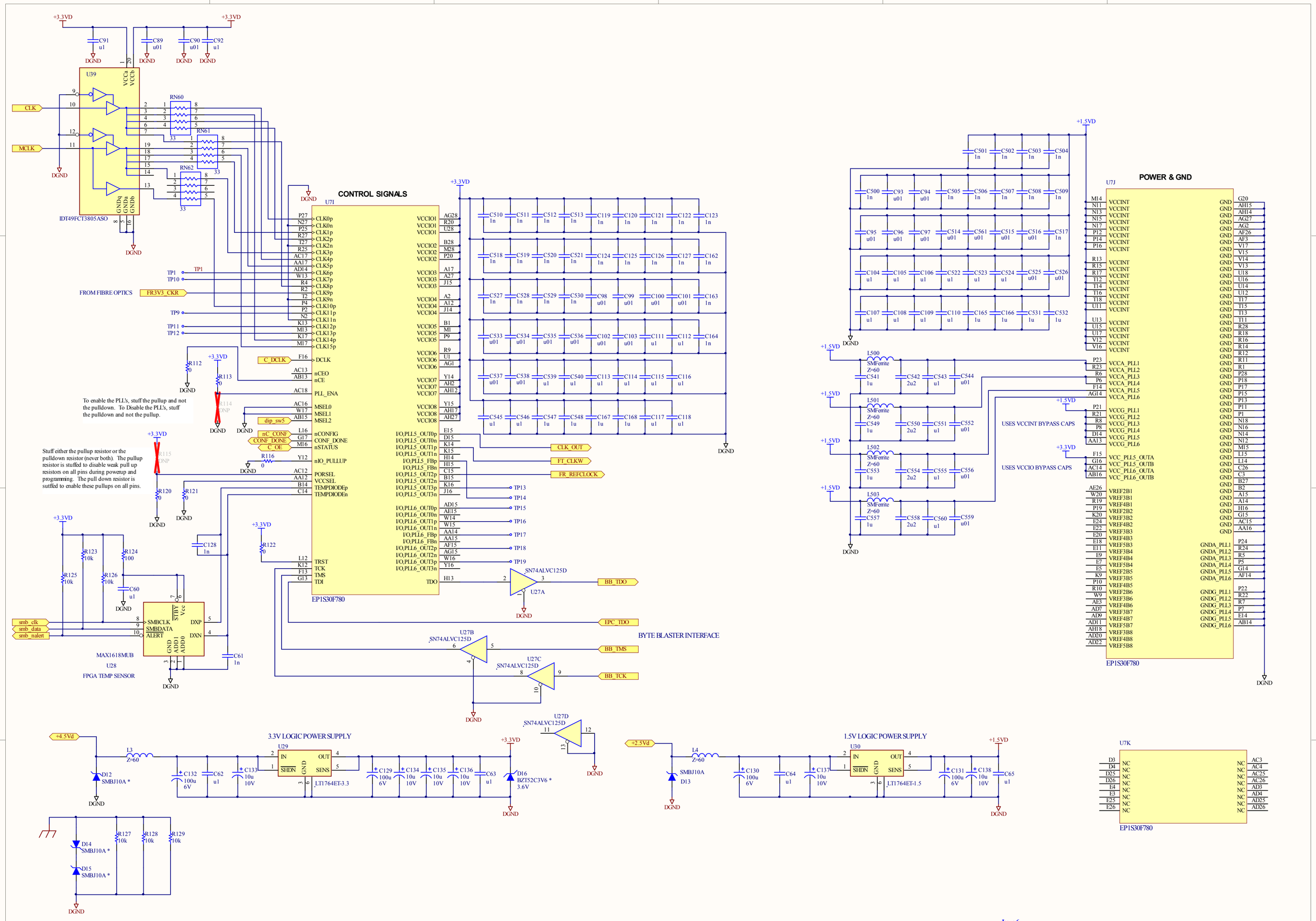
CONTROL SIGNALS
U7I
EP1S30F780
IDT49FCT3805ASO
U39
CLK
MCLK
FROM FIBRE OPTICS
FR3V3_CKR
C_DCLK
dip_sw5
nC_CONF
CONF_DONE
C_OE
To enable the PLL's, stuff the pullup and not the pulldown. To Disable the PLL's, stuff the pulldown and not the pullup.
Stuff either the pullup resistor or the pulldown resistor (never both). The pullup resistor is stuffed to disable weak pull up resistors on all pins during powerup and programming. The pull down resistor is suffed to enable these pullups on all pins.
CLK_OUT
FT_CLKW
FR_REFCLOCK
BB_TDO
EPC_TDO
BB_TMS
BB_TCK
BYTE BLASTER INTERFACE
smb_clk
smb_data
smb_nalert
MAX1618MUB
U28
FPGA TEMP SENSOR
SN74ALVC125D
POWER & GND
U7J
USES VCCINT BYPASS CAPS
USES VCCIO BYPASS CAPS
3.3V LOGIC POWER SUPPLY
U29
LT1764ET-3.3
1.5V LOGIC POWER SUPPLY
U30
LT1764ET-1.5
U7K
Issue 6
Clock Card FPGA Power & Decoupling
University of British Columbia
Department of Physics & Astronomy
MCE Project
6224 Agricultural Road
Vancouver BC V6T 1Z1 Canada
Size: B
Number: SC2_ELE_S581_101
Revision: B
Date: 3/17/2008
Time: 2:23:43 PM
Sheet 6 of 10
File: C:\Scuba2\Scuba2 Protel\S581_101B_CC\S581_101_S006_FPGA_PWR.SCHDOC

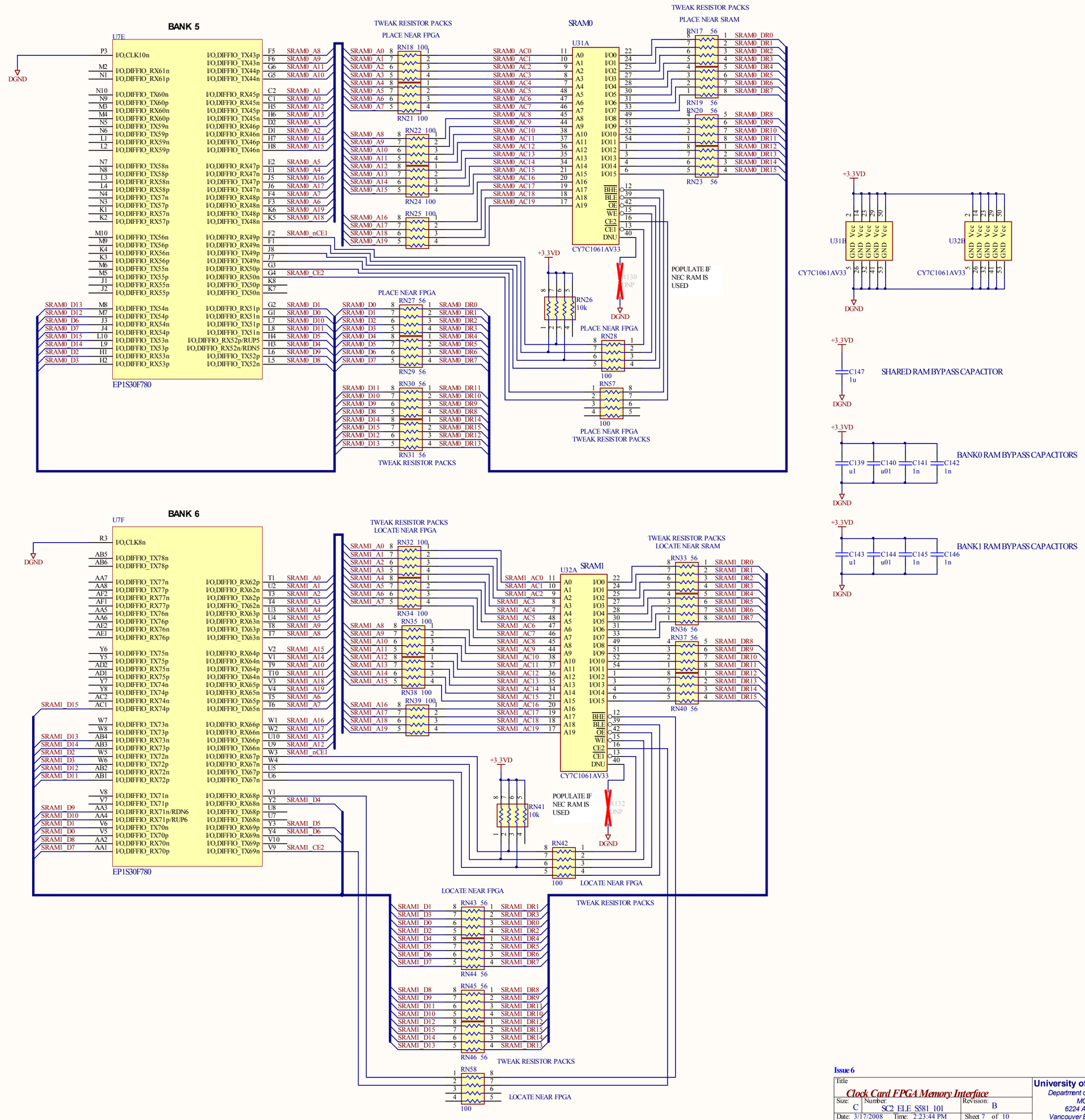

Issue 6

Title	Clock Card FPGA Memory Interface
Size: C	Number: SC2_ELE_S581_101
Revision: B	
Date: 3/17/2008	Time: 2:23:44 PM
Sheet 7 of 10	
File: C:\Scuba2\Scuba2 Protel\S581_101B_CC\S581_101_S007_SRAM.SCHDOC	

University of British Columbia
Department of Physics & Astronomy
MCE Project
6224 Agricultural Road
Vancouver BC V6T 1Z1 Canada

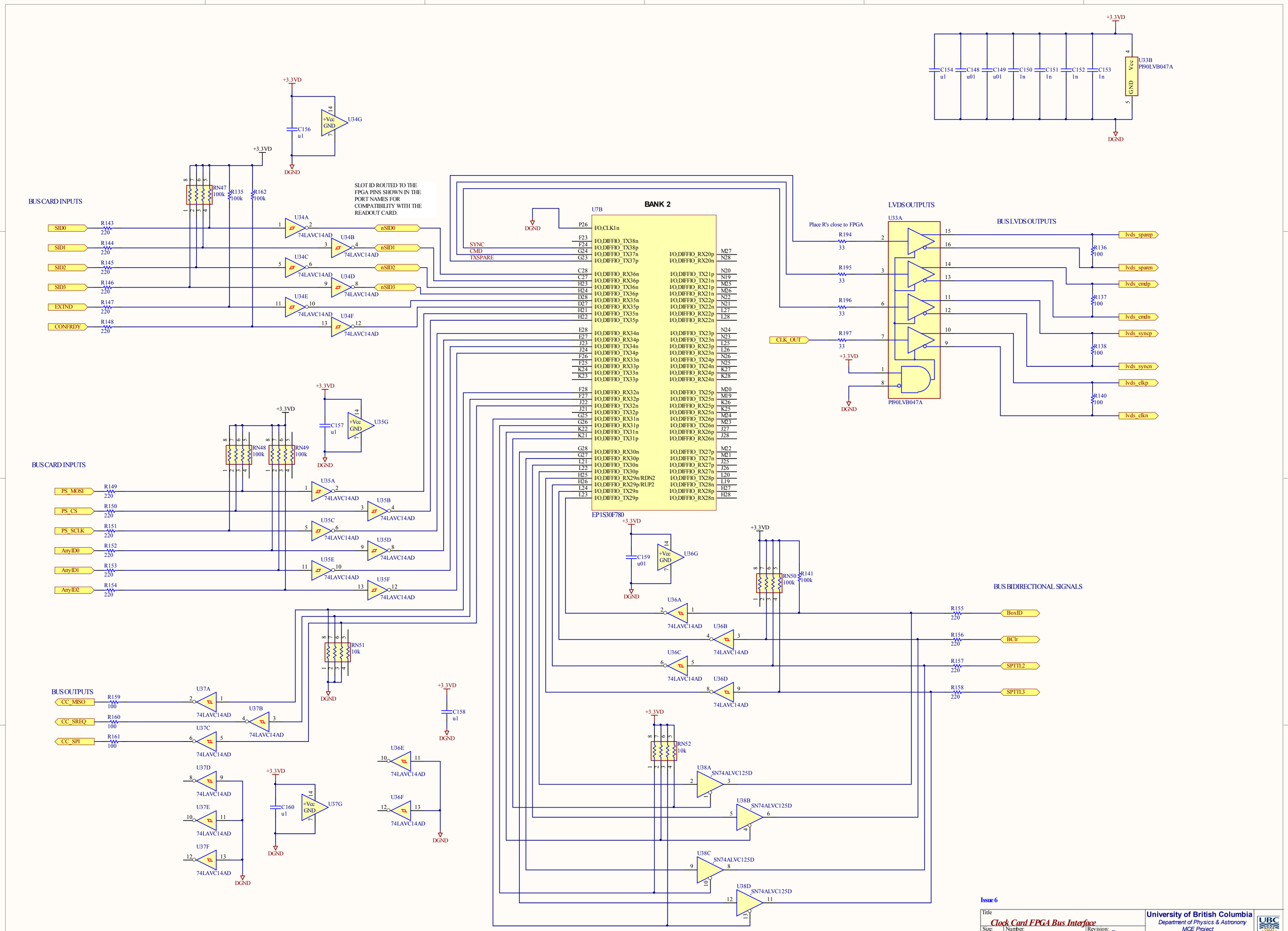

Issue 6

Title: Clock Card FPGA Bus Interface		University of British Columbia Department of Physics & Astronomy MCE Project 6224 Agricultural Road Vancouver BC V6T 1Z1 Canada
Size: C	Number: SC2_ELE_S581_101	Revision: B
Date: 3/17/2008 Time: 2:23:44 PM	Sheet 8 of 10	
File: C:\Scuba2\Scuba2 Protel\S581_101B_CC\S581_101_S008_FPGA_BUSIO.SCHDOC		

SHEET 1
S581_101_S001_BUS.SCHDOC

SHEET 2
S581_101_S002_LVDS.SCHDOC

SHEET3
S581_101_S003_CONFIG.SCHDOC

SHEET 4
S581_101_S004_FIBRE_OPTIC.SCHDOC

SHEET 5
S581_101_S005_FPGA_IO.SCHDOC

SHEET 6
S581_101_S006_FPGA_PWR.SCHDOC

SHEET 7
S581_101_S007_SRAM.SCHDOC

SHEET 8
S581_101_S008_FPGA_BUSIO.SCHDOC

U_HardwareSheet
S581_101_S009_MECH.SchDoc

Issue 6

Title *Clock Card Top Level*			University of British Columbia Department of Physics & Astronomy MCE Project 6224 Agricultural Road Vancouver BC V6T 1Z1 Canada
Size: B	Number: SC2_ELE_S581_101	Revision: B	
Date: 3/17/2008	Time: 2:23:44 PM	Sheet 9 of 10	
File: C:\Scuba2\Scuba2 Protel\S581_101B_CC\S581_101_S000_TOP.SCHDOC			