Bias Card Master Sheet
BC_Interface.SCHDOC;BC_Config.SCHDOC;BC_FPGA1.SCHDOC;BC_FPGA2.SCHDOC;BC_Analog.SCHDOC;BC_SA_Htr.SCHDOC;BC_Low_Noise_Bias.SCHDOC;BC_Mechanical.SchDoc

Use UBC Logo
Use UBC Logo

Add Fiducial Point
FP1
Add Fiducial Point
FP2
Add Fiducial Point
FP3
Add Fiducial Point
FP4

Global fiducials should be located in the four corners of the PCB board.

Fiducials should be at least 3mm from the edge of the board.

Schematic Valid For: **[No Variations]**

Title *MCE Bias Card*			**University of British Columbia** *Department of Physics & Astronomy MCE Project 6224 Agricultural Road Vancouver BC V6T 1Z1 Canada*
Size: C	Number: ELE-C583-101	Revision: F issue 0	
Date: 2010-07-08 Time: 11:34:12 AM		Sheet 0 of 12	
File: BC_Mastersheet.SCHDOC			

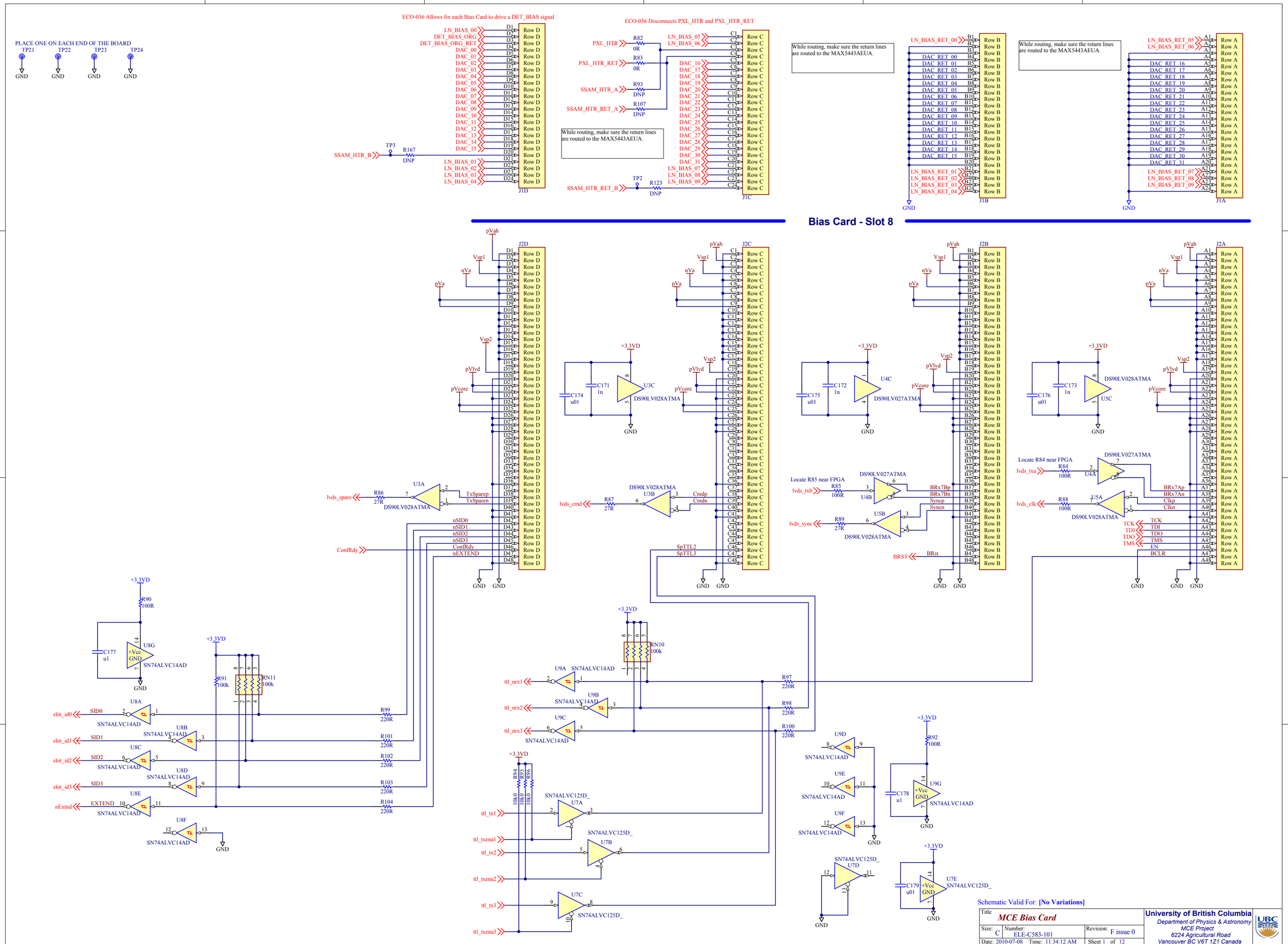
Bias Card - Slot 8
PLACE ONE ON EACH END OF THE BOARD
TP21 TP22 TP23 TP24
GND
ECO-036 Allows for each Bias Card to drive a DET_BIAS signal
ECO-036 Disconnects PXL_HTR and PXL_HTR_RET
While routing, make sure the return lines are routed to the MAX5443AEUA.
J1D
J1C
J1B
J1A
J2D
J2C
J2B
J2A
U3A
U3B
U3C
U4A
U4B
U4C
U5A
U5B
U5C
U7A
U7B
U7C
U7D
U7E
U8A
U8B
U8C
U8D
U8E
U8F
U8G
U9A
U9B
U9C
U9D
U9E
U9F
U9G
DS90LV028ATMA
DS90LV027ATMA
SN74ALVC14AD
SN74ALVC125D_
+3.3VD
pVah
Vsp1
nVa
pVa
Vsp2
pVlvd
pVcore
lvds_spare
lvds_cmd
lvds_txa
lvds_txb
lvds_clk
lvds_sync
Locate R85 near FPGA
Locate R84 near FPGA
BRST
ConfRdy
slot_id0
slot_id1
slot_id2
slot_id3
nExtnd
ttl_nrx1
ttl_nrx2
ttl_nrx3
ttl_tx1
ttl_txena1
ttl_tx2
ttl_txena2
ttl_tx3
ttl_txena3
Schematic Valid For: [No Variations]
Title
MCE Bias Card
Size: C
Number: ELE-C583-101
Revision: F issue 0
Date: 2010-07-08 Time: 11:34:12 AM
Sheet 1 of 12
File: BC_Interface.SCHDOC
University of British Columbia
Department of Physics & Astronomy
MCE Project
6224 Agricultural Road
Vancouver BC V6T 1Z1 Canada

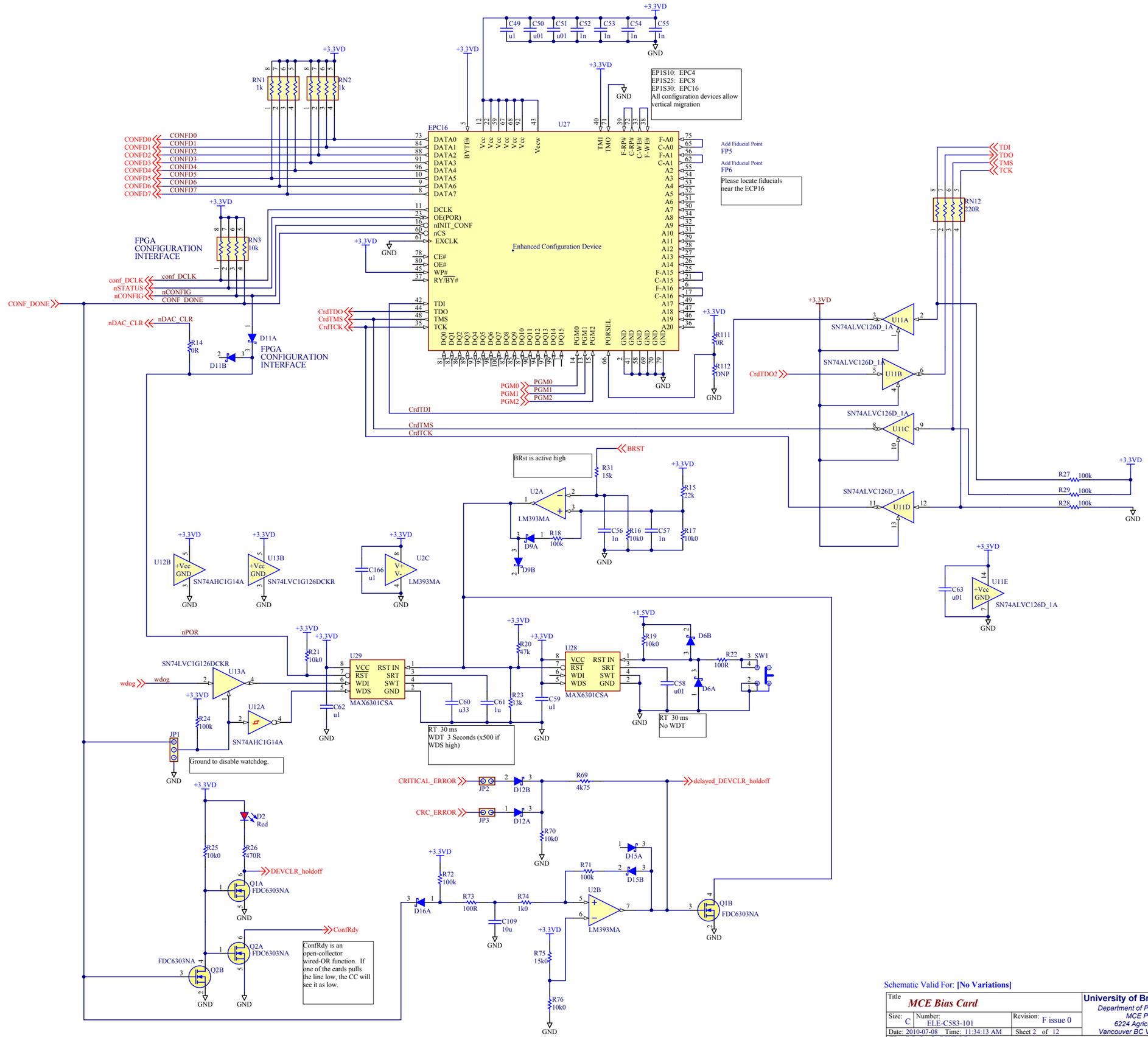

Schematic Valid For: **[No Variations]**

Title: *MCE Bias Card*		**University of British Columbia** *Department of Physics & Astronomy MCE Project 6224 Agricultural Road Vancouver BC V6T 1Z1 Canada*
Size: C	Number: ELE-C583-101	Revision: F issue 0
Date: 2010-07-08 Time: 11:34:13 AM	Sheet 2 of 12	
File: BC_Config.SCHDOC		

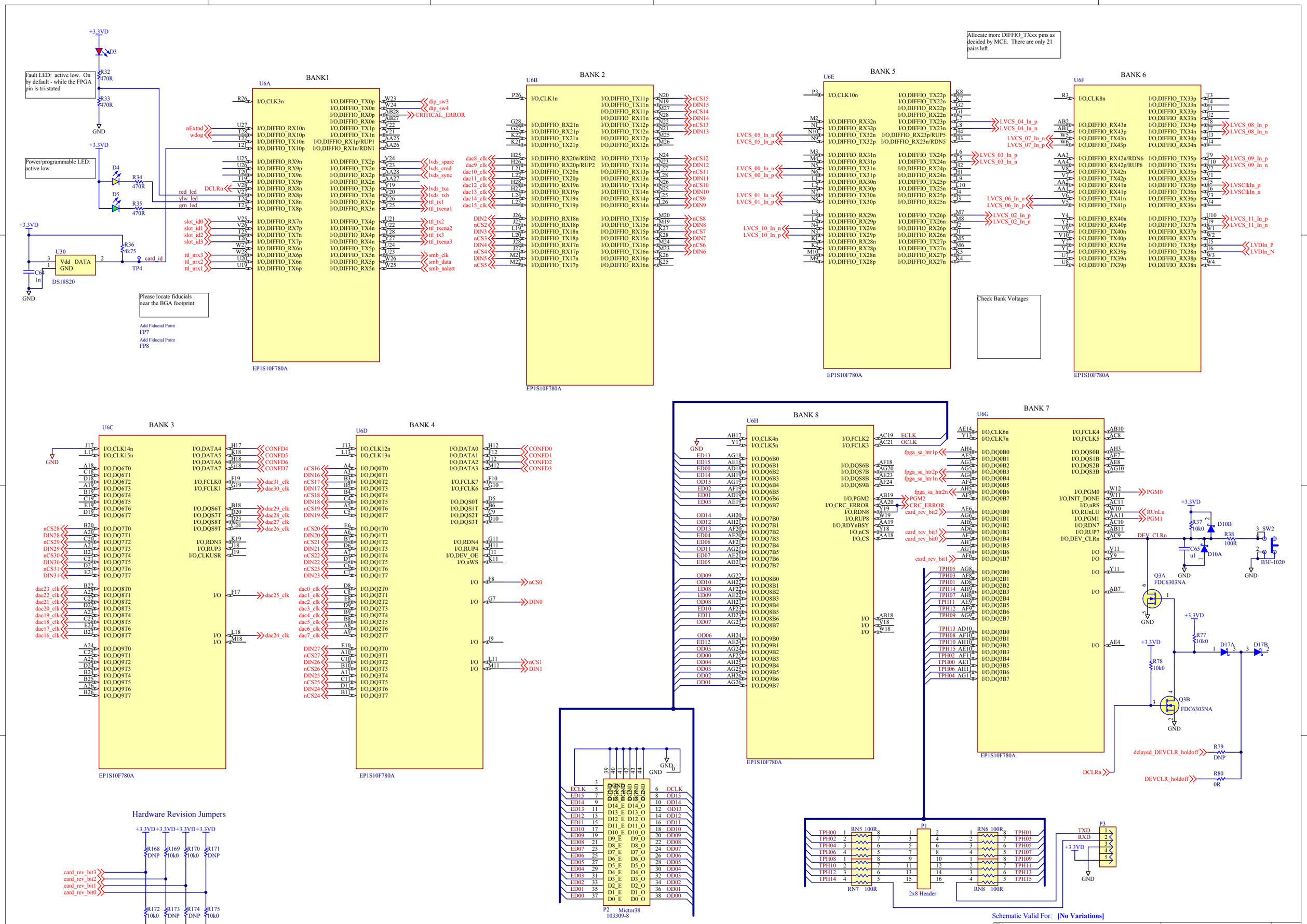
Fault LED: active low. On by default - while the FPGA pin is tri-stated
Power/programmable LED: active low.
Please locate fiducials near the BGA footprint.
Add Fiducial Point FP7
Add Fiducial Point FP8
Allocate more DIFFIO_TXxx pins as decided by MCE. There are only 21 pairs left.
Check Bank Voltages
BANK1
BANK 2
BANK 5
BANK 6
BANK 3
BANK 4
BANK 8
BANK 7
EP1S10F780A
Hardware Revision Jumpers
P2 Mictor38 103309-8
P1 2x8 Header
P3
Schematic Valid For: [No Variations]
Title MCE Bias Card
Size: C
Number: ELE-C583-101
Revision: F issue 0
Date: 2010-07-08 Time: 11:34:13 AM
Sheet 3 of 12
File: BC_FPGA1.SCHDOC
University of British Columbia
Department of Physics & Astronomy
MCE Project
6224 Agricultural Road
Vancouver BC V6T 1Z1 Canada

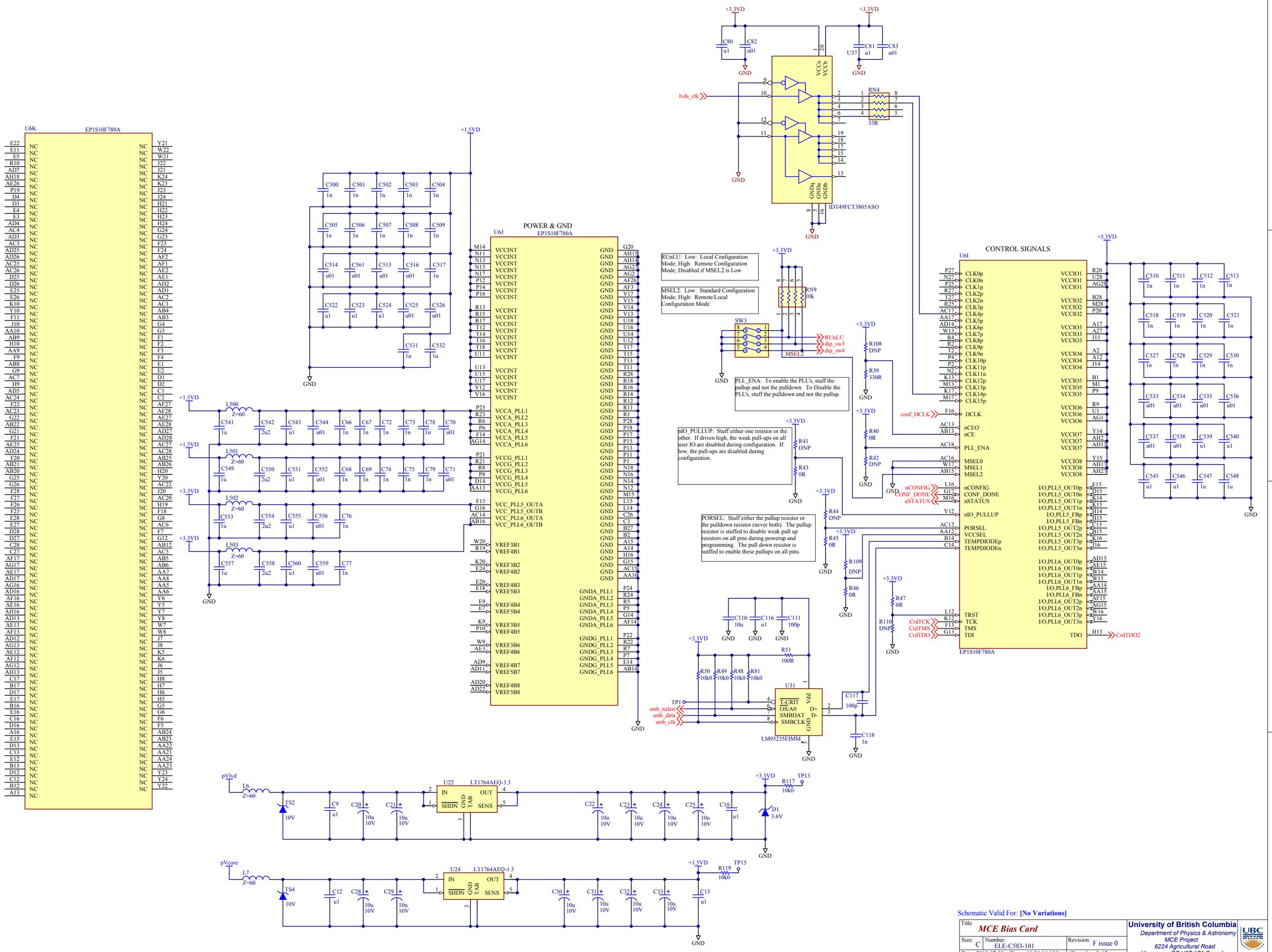

Schematic Valid For: **[No Variations]**

Title: *MCE Bias Card*			University of British Columbia Department of Physics & Astronomy MCE Project 6224 Agricultural Road Vancouver BC V6T 1Z1 Canada
Size: C	Number: ELE-C583-101	Revision: F issue 0	
Date: 2010-07-08 Time: 11:34:14 AM		Sheet 4 of 12	
File: BC_FPGA2.SCHDOC			

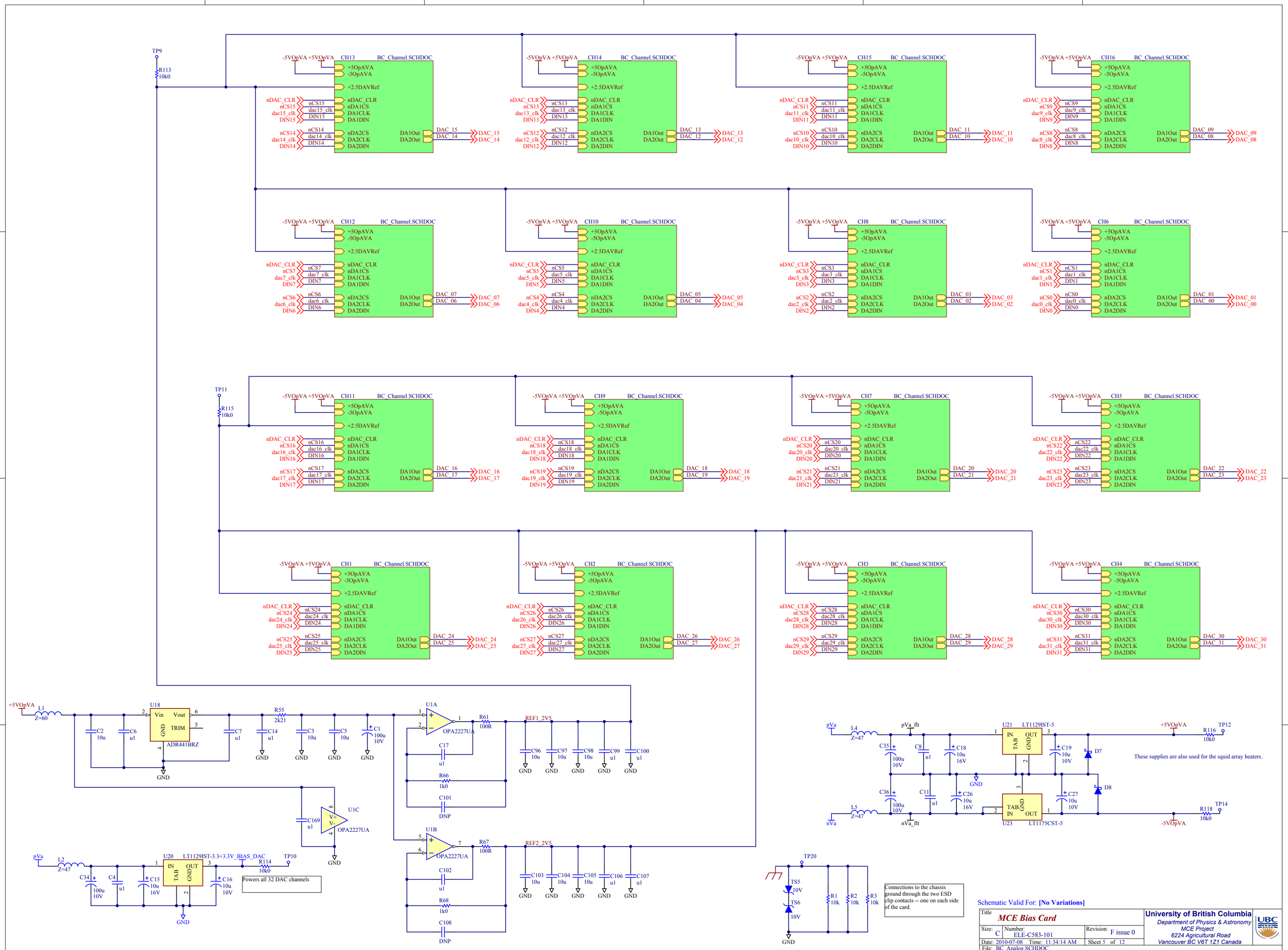

Schematic Valid For: **[No Variations]**

Title: *MCE Bias Card*			**University of British Columbia** *Department of Physics & Astronomy MCE Project 6224 Agricultural Road Vancouver BC V6T 1Z1 Canada*
Size: C	Number: ELE-C583-101	Revision: F issue 0	
Date: 2010-07-08 Time: 11:34:14 AM		Sheet 5 of 12	
File: BC_Analog.SCHDOC			

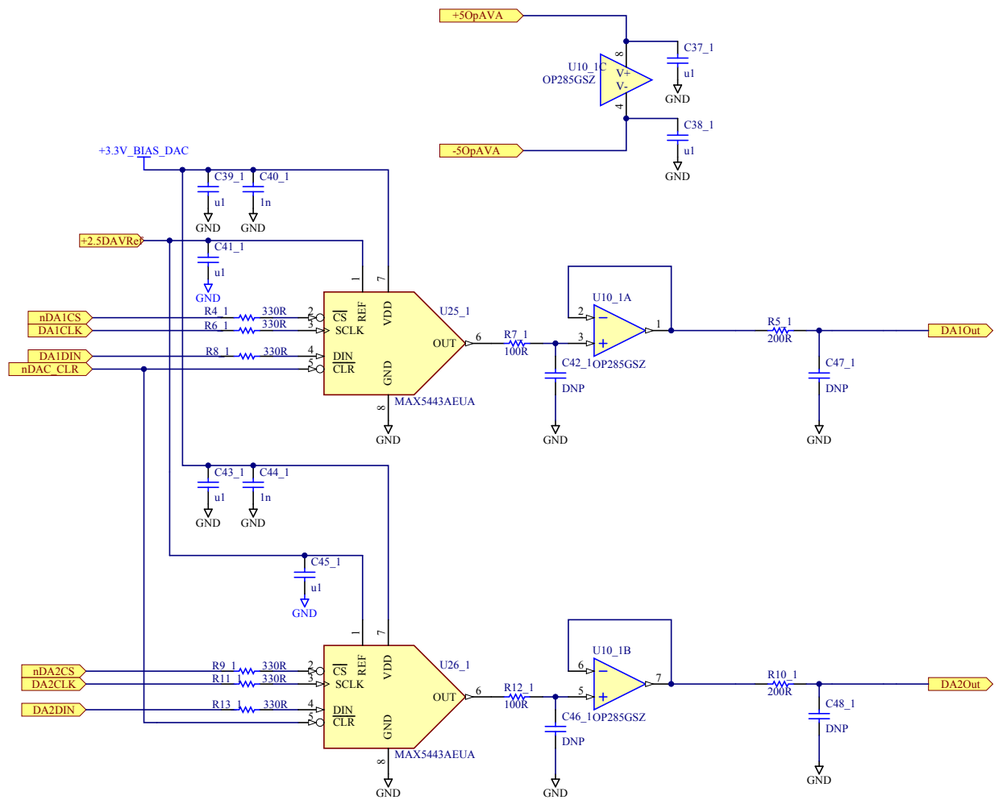

Schematic Valid For: **[No Variations]**

Title: *MCE Bias Card*			**University of British Columbia** *Department of Physics & Astronomy MCE Project 6224 Agricultural Road Vancouver BC V6T 1Z1 Canada*
Size: C	Number: ELE-C583-101	Revision: F issue 0	
Date: 2010-07-08 Time: 11:34:14 AM		Sheet 6 of 12	
File: BC_Channel.SCHDOC			

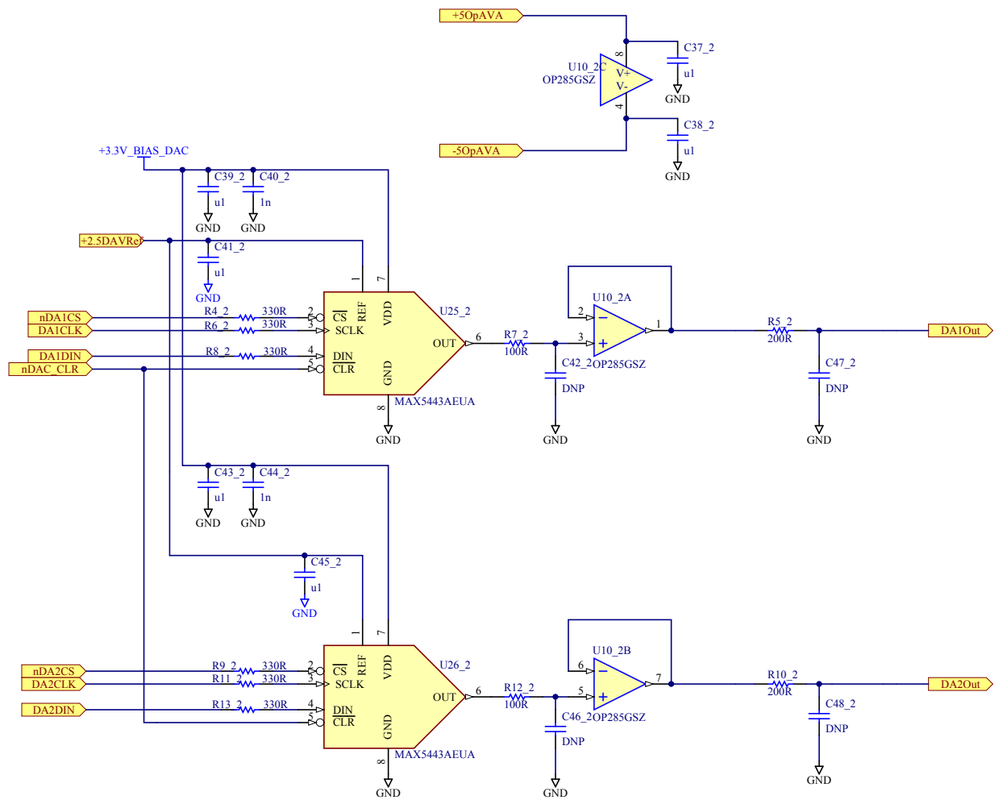

Schematic Valid For: **[No Variations]**

Title: *MCE Bias Card*			**University of British Columbia** *Department of Physics & Astronomy MCE Project 6224 Agricultural Road Vancouver BC V6T 1Z1 Canada*
Size: C	Number: ELE-C583-101	Revision: F issue 0	
Date: 2010-07-08 Time: 11:34:15 AM		Sheet 6 of 12	
File: BC_Channel.SCHDOC			

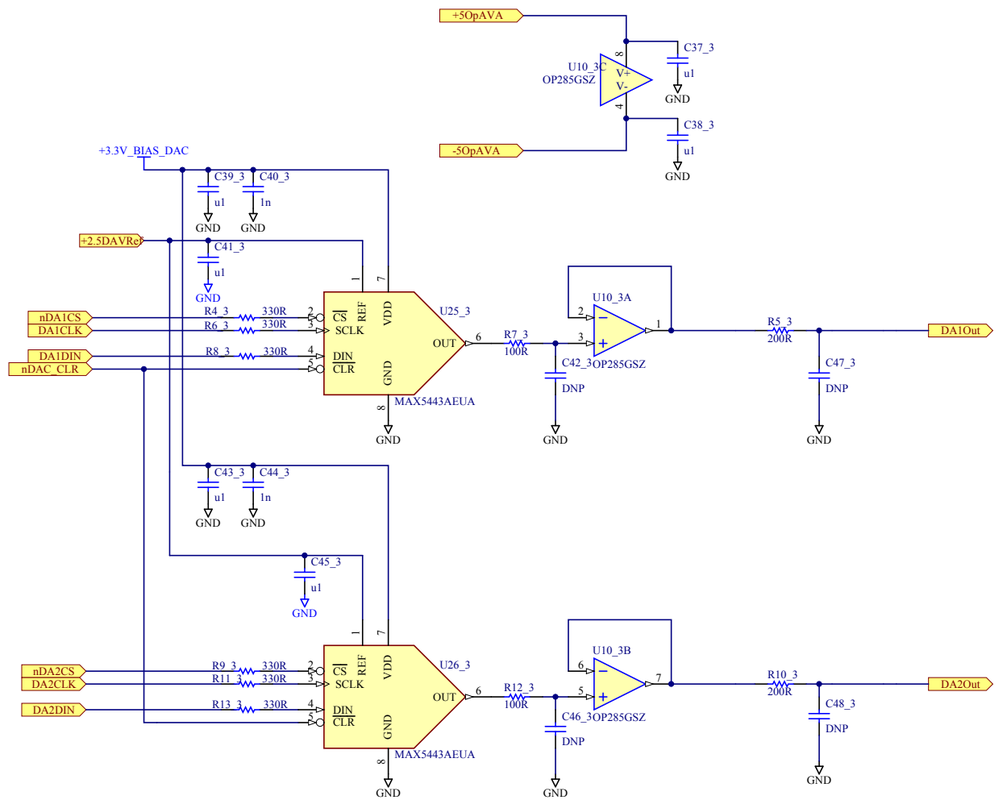

Schematic Valid For: **[No Variations]**

Title: *MCE Bias Card*			**University of British Columbia** *Department of Physics & Astronomy MCE Project 6224 Agricultural Road Vancouver BC V6T 1Z1 Canada*
Size: C	Number: ELE-C583-101	Revision: F issue 0	
Date: 2010-07-08 Time: 11:34:15 AM		Sheet 6 of 12	
File: BC_Channel.SCHDOC			

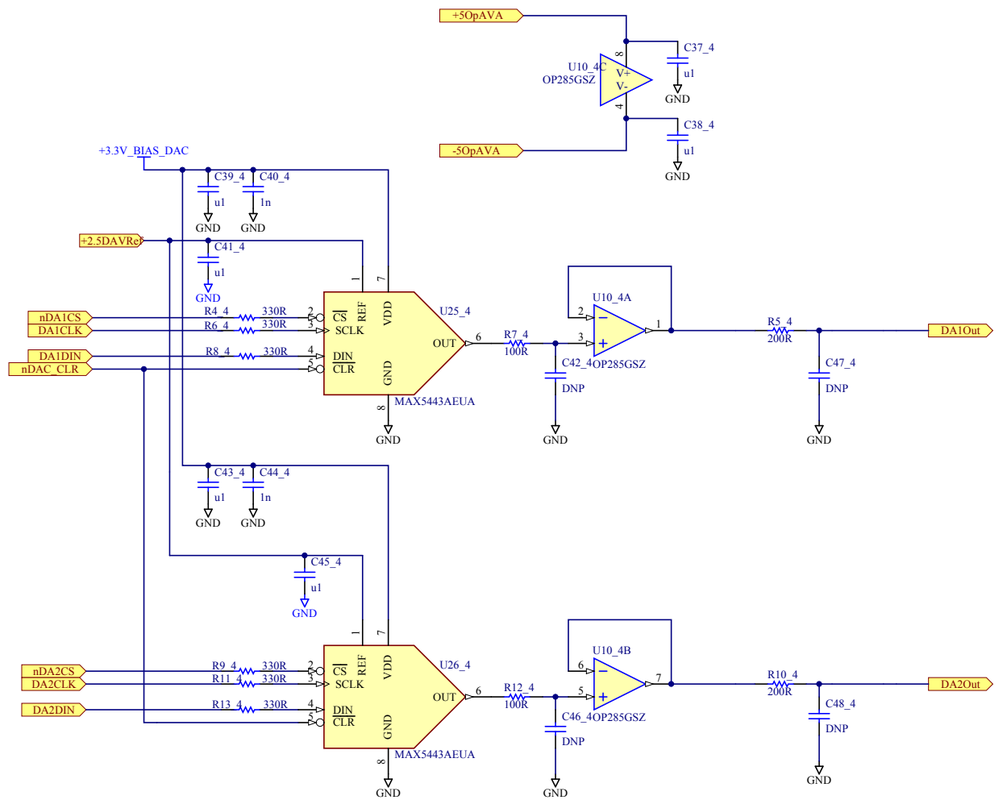

Schematic Valid For: **[No Variations]**

Title: *MCE Bias Card*			**University of British Columbia** *Department of Physics & Astronomy MCE Project 6224 Agricultural Road Vancouver BC V6T 1Z1 Canada*
Size: C	Number: ELE-C583-101	Revision: F issue 0	
Date: 2010-07-08 Time: 11:34:16 AM		Sheet 6 of 12	
File: BC_Channel.SCHDOC			

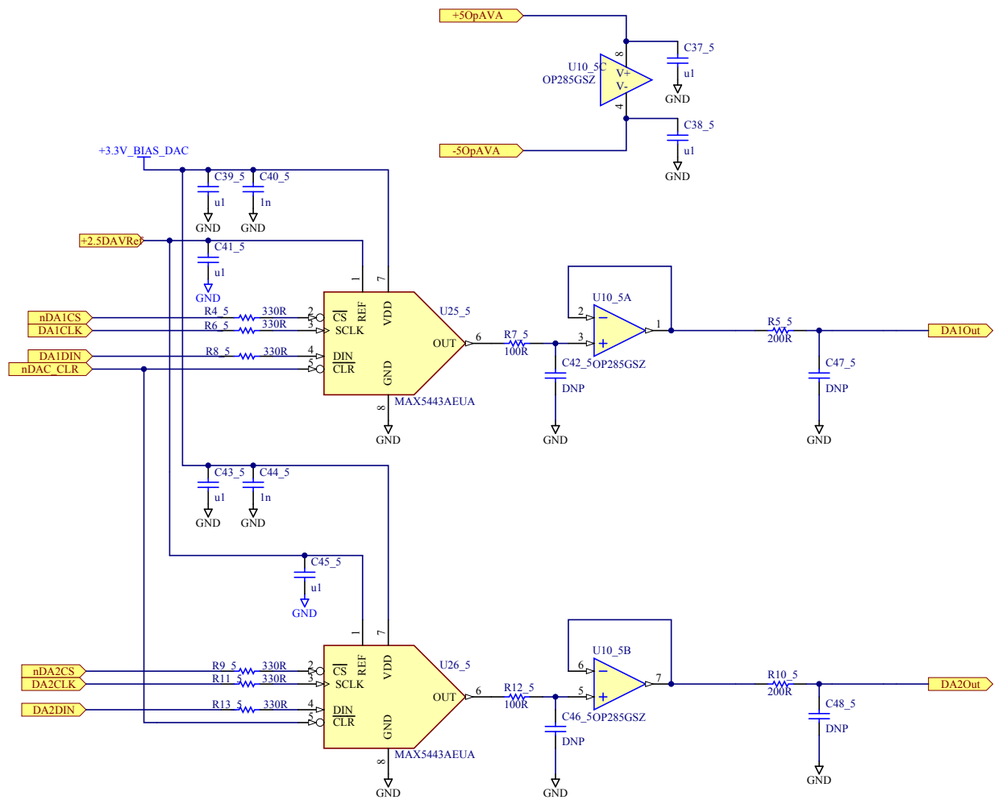

Schematic Valid For: **[No Variations]**

Title: *MCE Bias Card*			**University of British Columbia** *Department of Physics & Astronomy MCE Project 6224 Agricultural Road Vancouver BC V6T 1Z1 Canada*
Size: C	Number: ELE-C583-101	Revision: F issue 0	
Date: 2010-07-08 Time: 11:34:16 AM		Sheet 6 of 12	
File: BC_Channel.SCHDOC			

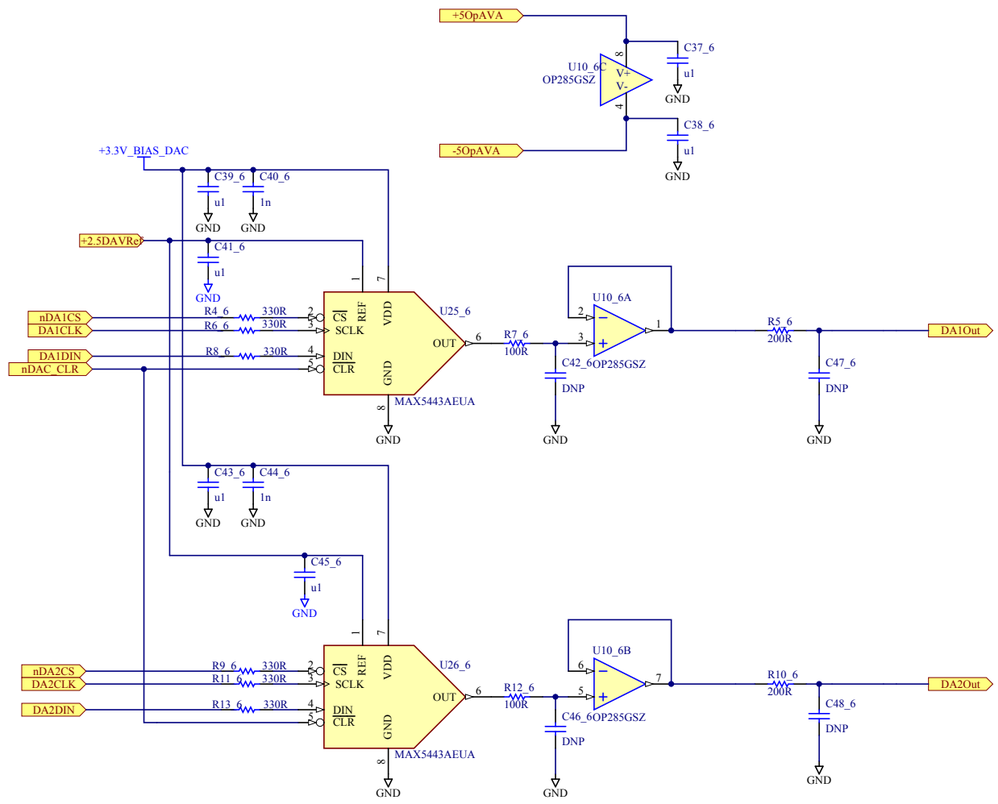

Schematic Valid For: **[No Variations]**

Title: *MCE Bias Card*			**University of British Columbia** *Department of Physics & Astronomy MCE Project 6224 Agricultural Road Vancouver BC V6T 1Z1 Canada*
Size: C	Number: ELE-C583-101	Revision: F issue 0	
Date: 2010-07-08 Time: 11:34:16 AM		Sheet 6 of 12	
File: BC_Channel.SCHDOC			

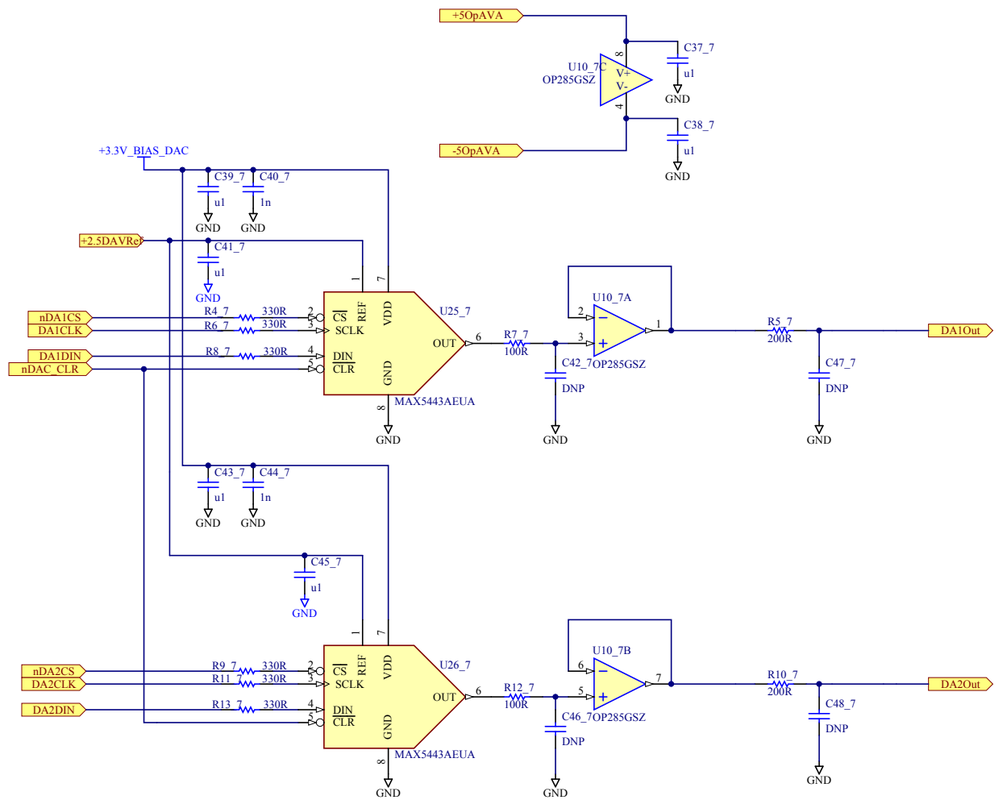

Schematic Valid For: **[No Variations]**

Title: *MCE Bias Card*			**University of British Columbia** *Department of Physics & Astronomy MCE Project 6224 Agricultural Road Vancouver BC V6T 1Z1 Canada*
Size: C	Number: ELE-C583-101	Revision: F issue 0	
Date: 2010-07-08 Time: 11:34:17 AM		Sheet 6 of 12	
File: BC_Channel.SCHDOC			

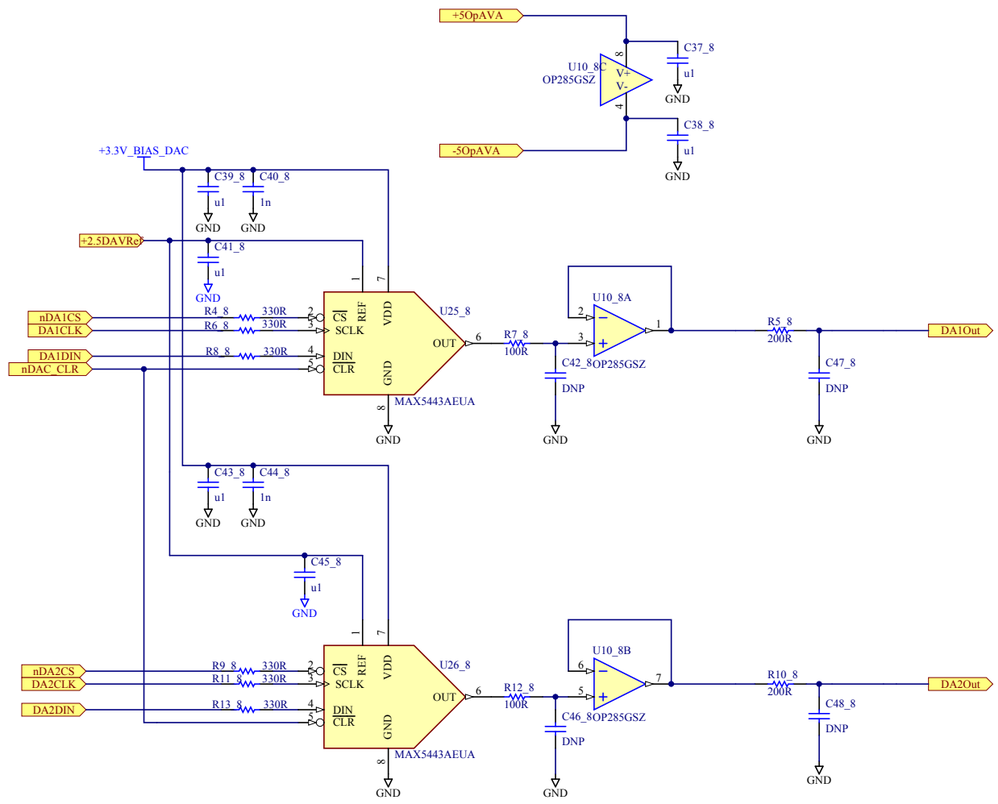

Schematic Valid For: **[No Variations]**

Title: *MCE Bias Card*			**University of British Columbia** *Department of Physics & Astronomy MCE Project 6224 Agricultural Road Vancouver BC V6T 1Z1 Canada*
Size: C	Number: ELE-C583-101	Revision: F issue 0	
Date: 2010-07-08 Time: 11:34:17 AM		Sheet 6 of 12	
File: BC_Channel.SCHDOC			

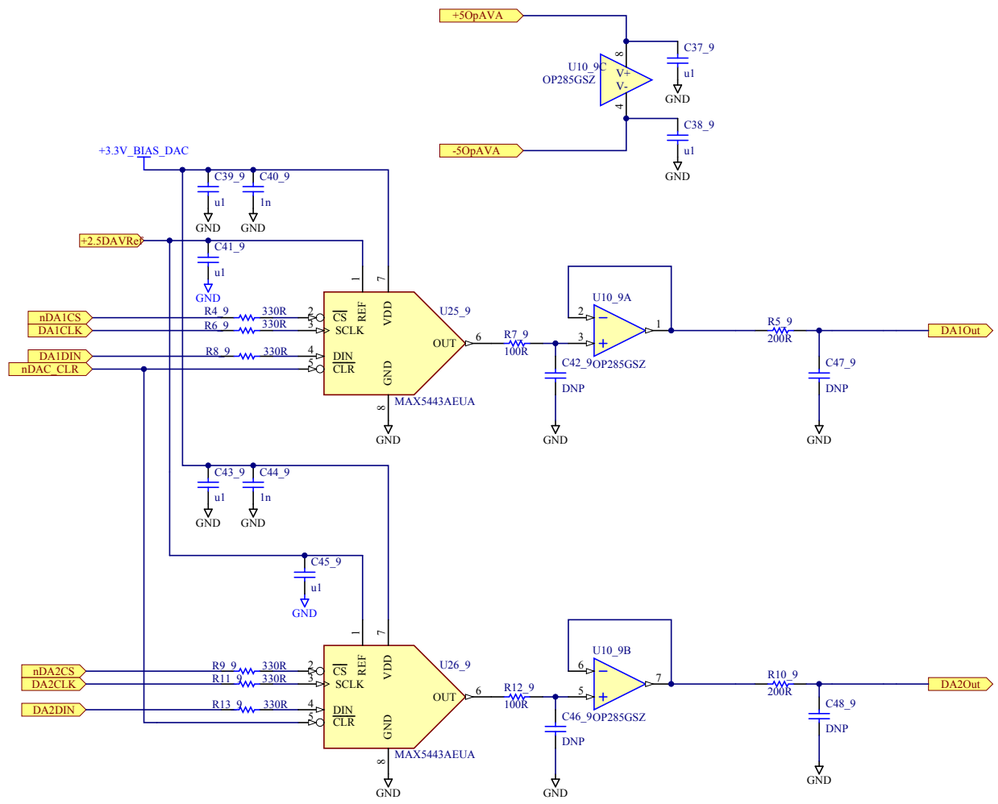

Schematic Valid For: **[No Variations]**

Title: *MCE Bias Card*			**University of British Columbia** *Department of Physics & Astronomy MCE Project 6224 Agricultural Road Vancouver BC V6T 1Z1 Canada*
Size: C	Number: ELE-C583-101	Revision: F issue 0	
Date: 2010-07-08 Time: 11:34:18 AM		Sheet 6 of 12	
File: BC_Channel.SCHDOC			

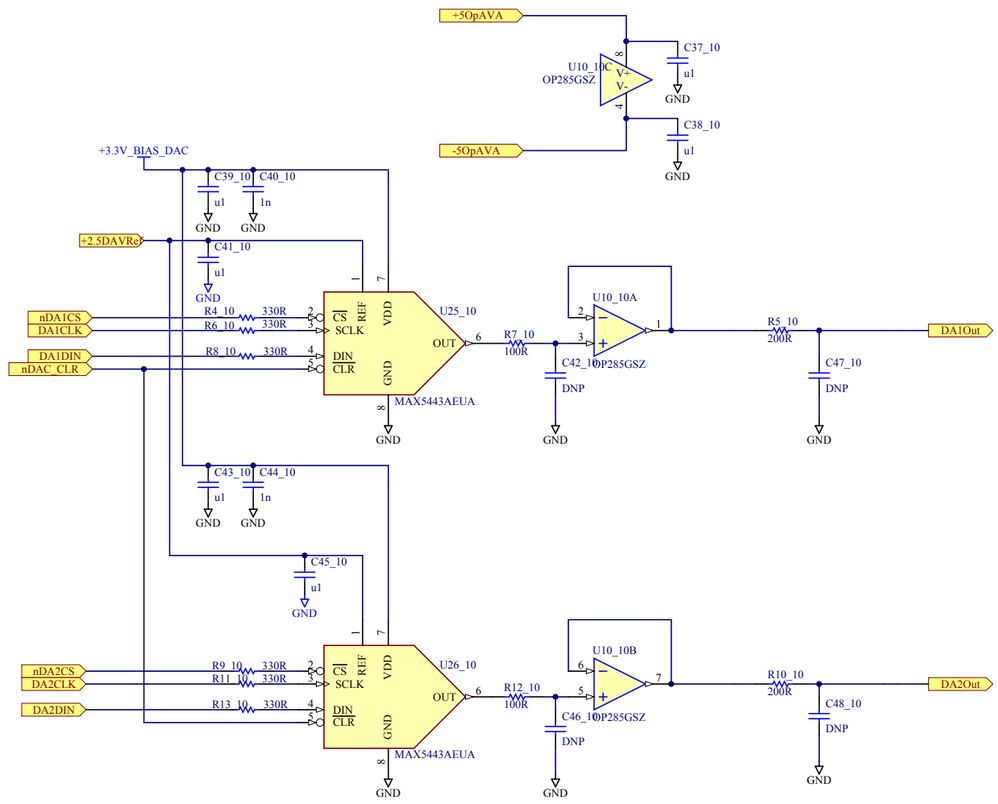

Schematic Valid For: **[No Variations]**

Title: *MCE Bias Card*			**University of British Columbia** *Department of Physics & Astronomy MCE Project 6224 Agricultural Road Vancouver BC V6T 1Z1 Canada*
Size: C	Number: ELE-C583-101	Revision: F issue 0	
Date: 2010-07-08 Time: 11:34:18 AM		Sheet 6 of 12	
File: BC_Channel.SCHDOC			

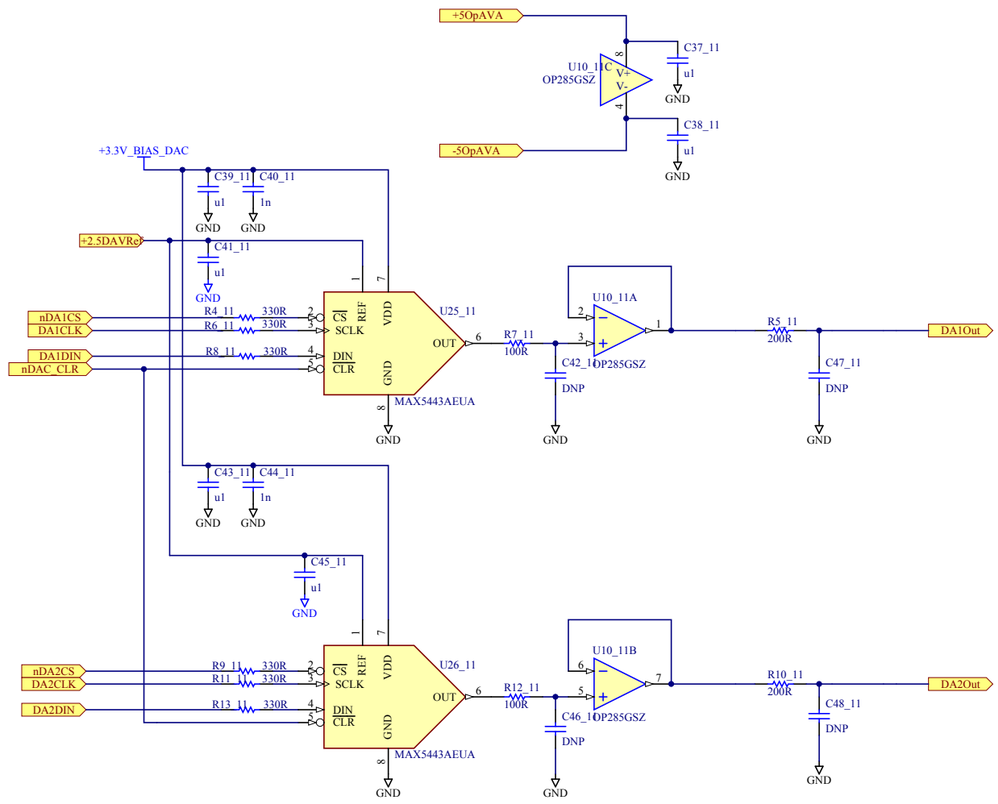

Schematic Valid For: **[No Variations]**

Title: *MCE Bias Card*			**University of British Columbia** *Department of Physics & Astronomy MCE Project 6224 Agricultural Road Vancouver BC V6T 1Z1 Canada*
Size: C	Number: ELE-C583-101	Revision: F issue 0	
Date: 2010-07-08 Time: 11:34:19 AM		Sheet 6 of 12	
File: BC_Channel.SCHDOC			

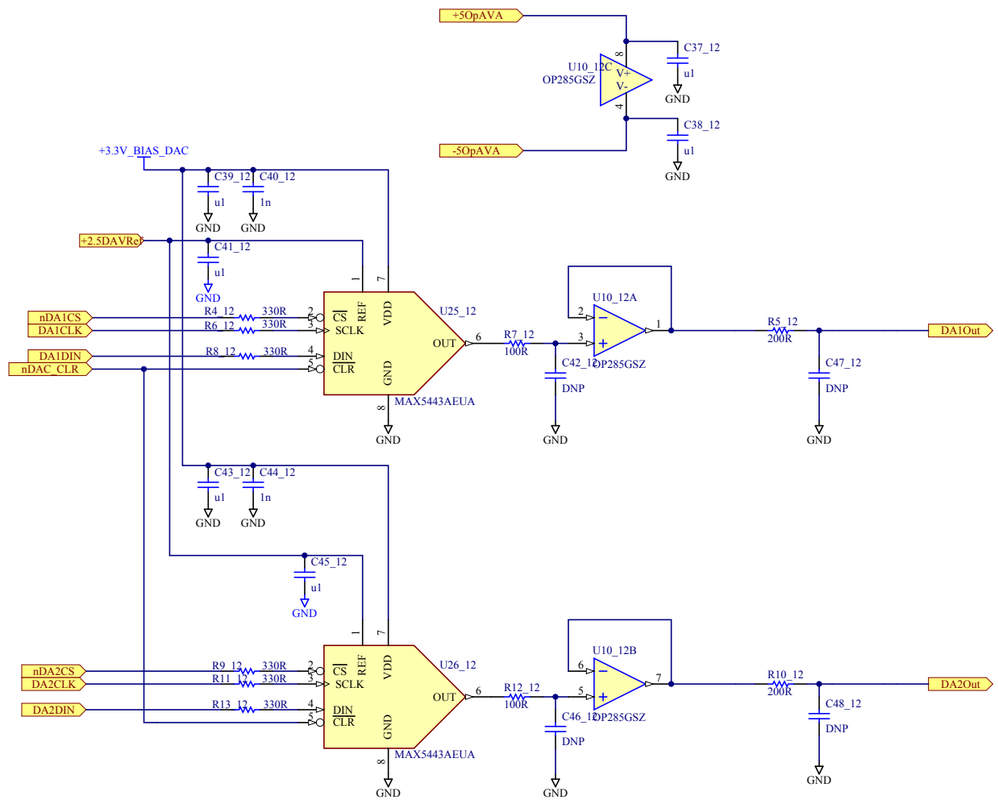

Schematic Valid For: **[No Variations]**

Title: *MCE Bias Card*			**University of British Columbia** *Department of Physics & Astronomy MCE Project 6224 Agricultural Road Vancouver BC V6T 1Z1 Canada*
Size: C	Number: ELE-C583-101	Revision: F issue 0	
Date: 2010-07-08 Time: 11:34:19 AM		Sheet 6 of 12	
File: BC_Channel.SCHDOC			

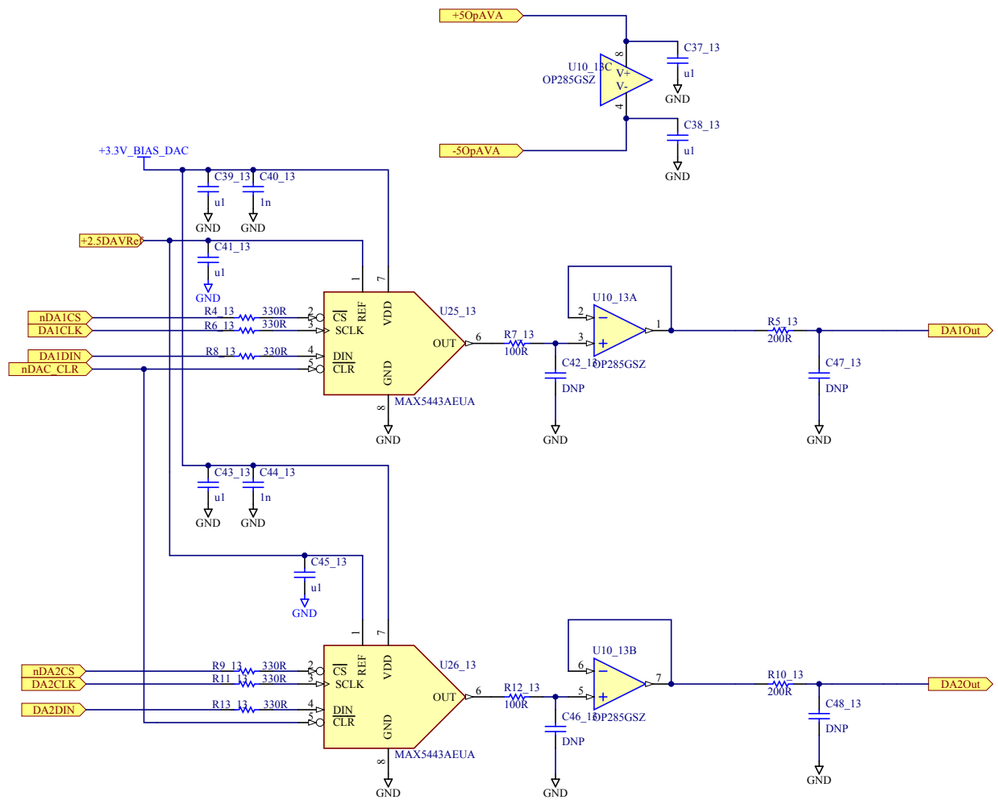

Schematic Valid For: **[No Variations]**

Title: *MCE Bias Card*			**University of British Columbia** *Department of Physics & Astronomy MCE Project 6224 Agricultural Road Vancouver BC V6T 1Z1 Canada*
Size: C	Number: ELE-C583-101	Revision: F issue 0	
Date: 2010-07-08 Time: 11:34:20 AM		Sheet 6 of 12	
File: BC_Channel.SCHDOC			

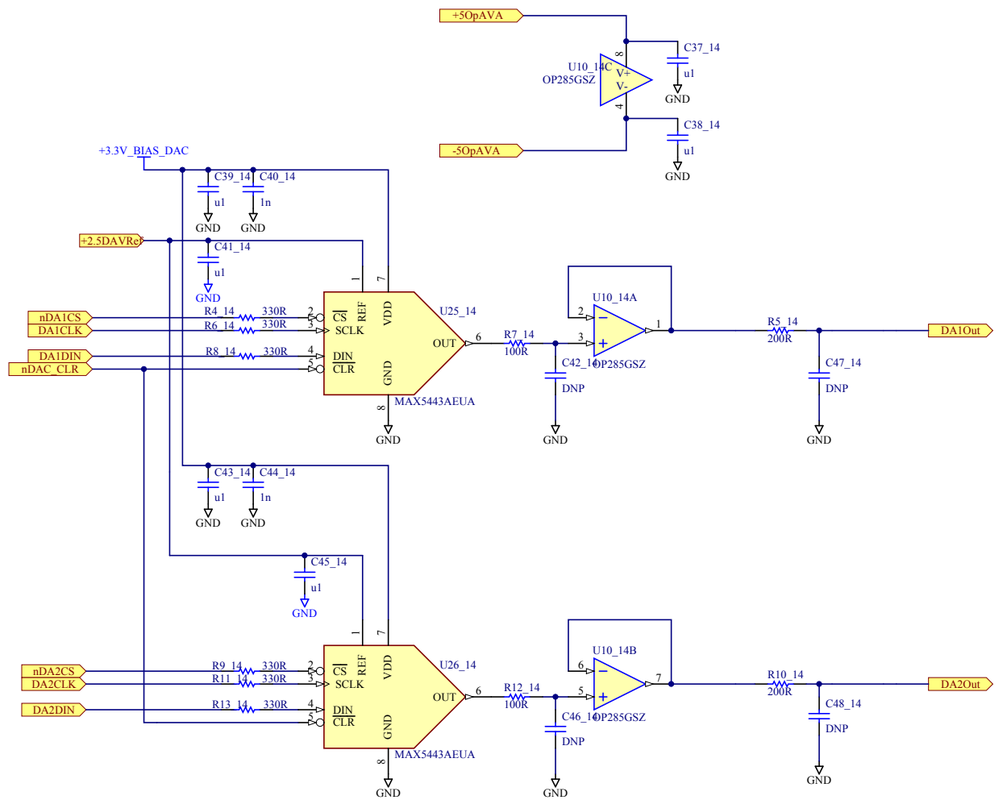

Schematic Valid For: **[No Variations]**

Title: *MCE Bias Card*			**University of British Columbia** *Department of Physics & Astronomy MCE Project 6224 Agricultural Road Vancouver BC V6T 1Z1 Canada*
Size: C	Number: ELE-C583-101	Revision: F issue 0	
Date: 2010-07-08 Time: 11:34:20 AM		Sheet 6 of 12	
File: BC_Channel.SCHDOC			

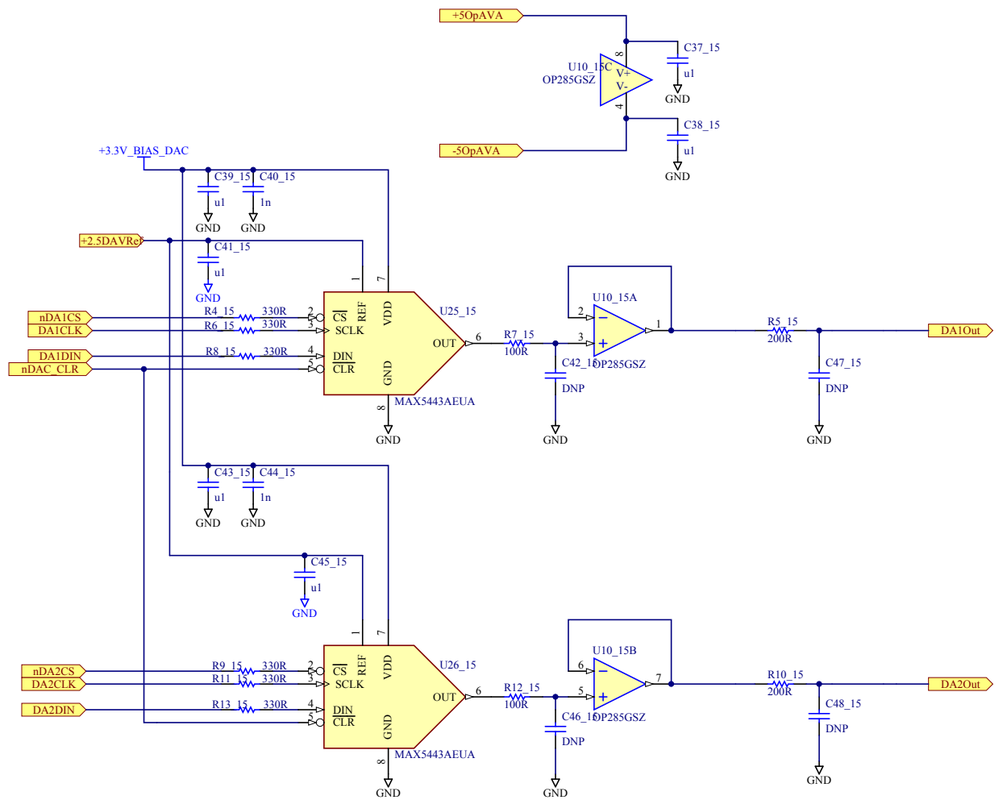

Schematic Valid For: **[No Variations]**

Title: *MCE Bias Card*			**University of British Columbia** *Department of Physics & Astronomy MCE Project 6224 Agricultural Road Vancouver BC V6T 1Z1 Canada*
Size: C	Number: ELE-C583-101	Revision: F issue 0	
Date: 2010-07-08 Time: 11:34:20 AM		Sheet 6 of 12	
File: BC_Channel.SCHDOC			

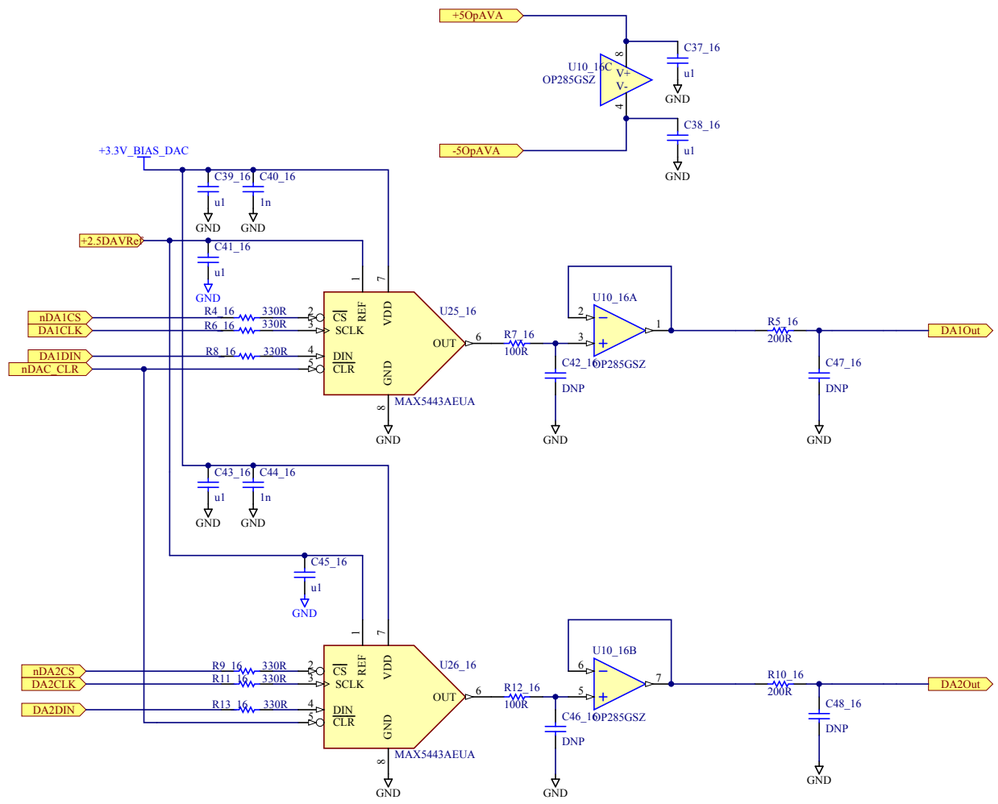

Schematic Valid For: **[No Variations]**

Title: *MCE Bias Card*			**University of British Columbia** *Department of Physics & Astronomy MCE Project 6224 Agricultural Road Vancouver BC V6T 1Z1 Canada*
Size: C	Number: ELE-C583-101	Revision: F issue 0	
Date: 2010-07-08 Time: 11:34:21 AM		Sheet 6 of 12	
File: BC_Channel.SCHDOC			

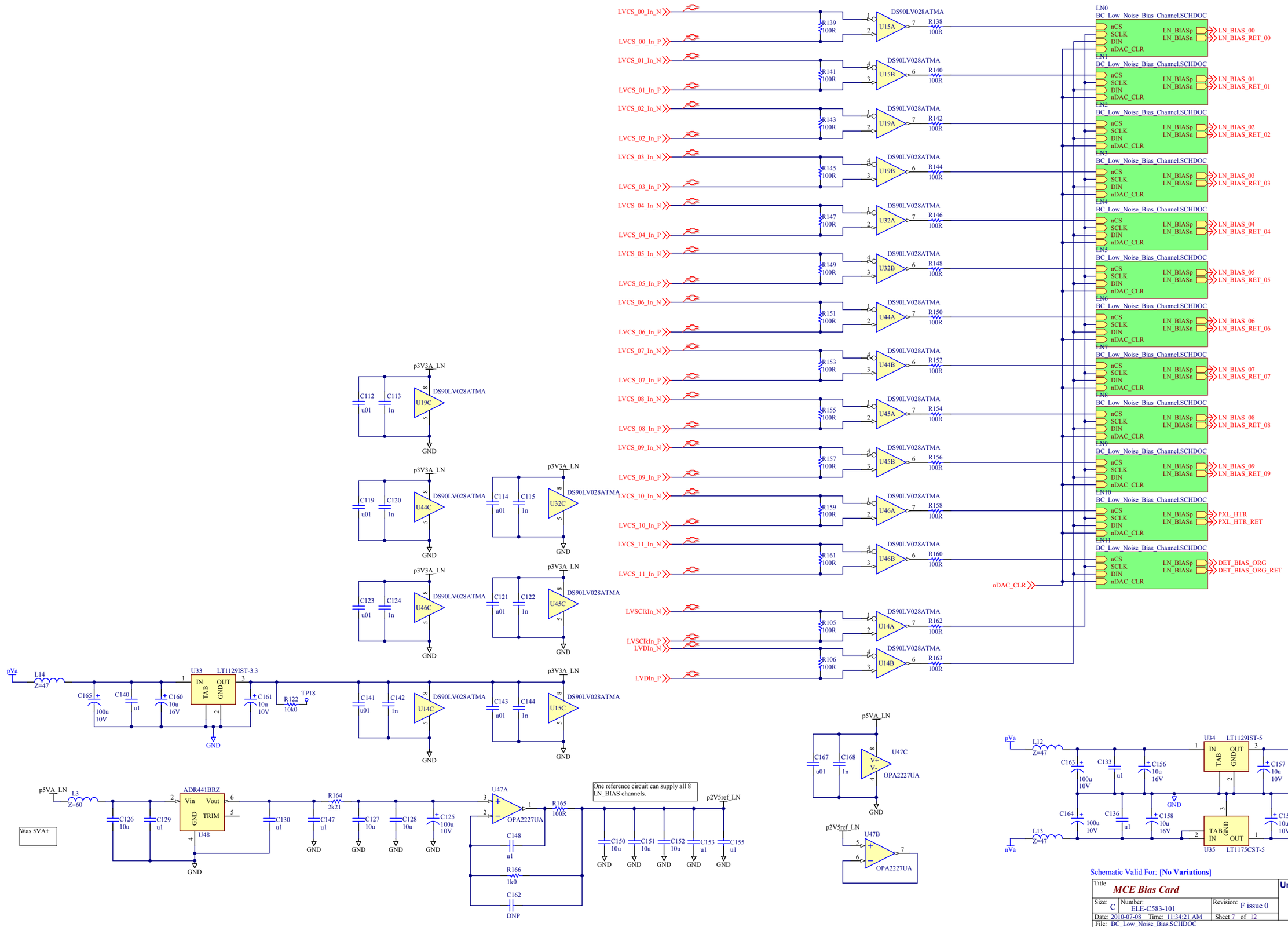

Schematic Valid For: **[No Variations]**

Title: *MCE Bias Card*			**University of British Columbia**
Size: C	Number: ELE-C583-101	Revision: F issue 0	*Department of Physics & Astronomy*
Date: 2010-07-08 Time: 11:34:21 AM		Sheet 7 of 12	*MCE Project*
File: BC_Low_Noise_Bias.SCHDOC			*6224 Agricultural Road*
			Vancouver BC V6T 1Z1 Canada

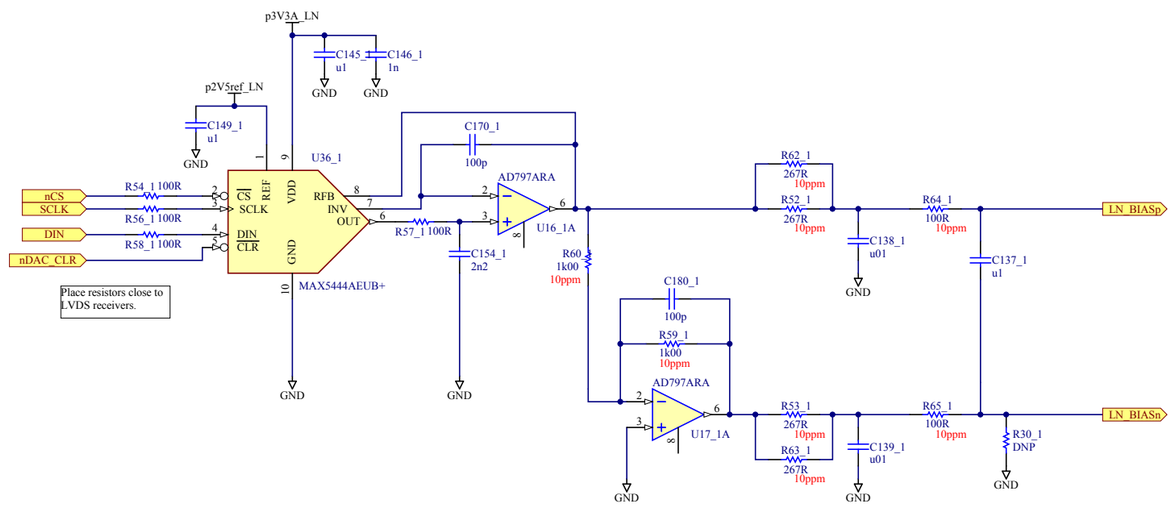

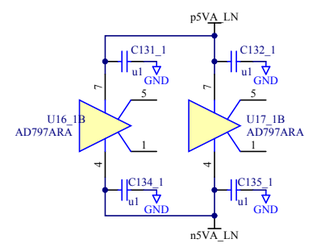

Schematic Valid For: [No Variations]

Title: *MCE Bias Card*			**University of British Columbia** *Department of Physics & Astronomy MCE Project 6224 Agricultural Road Vancouver BC V6T 1Z1 Canada*
Size: C	Number: ELE-C583-101	Revision: F issue 0	
Date: 2010-07-08 Time: 11:34:21 AM		Sheet 8 of 12	
File: BC_Low_Noise_Bias_Channel.SCHDOC			

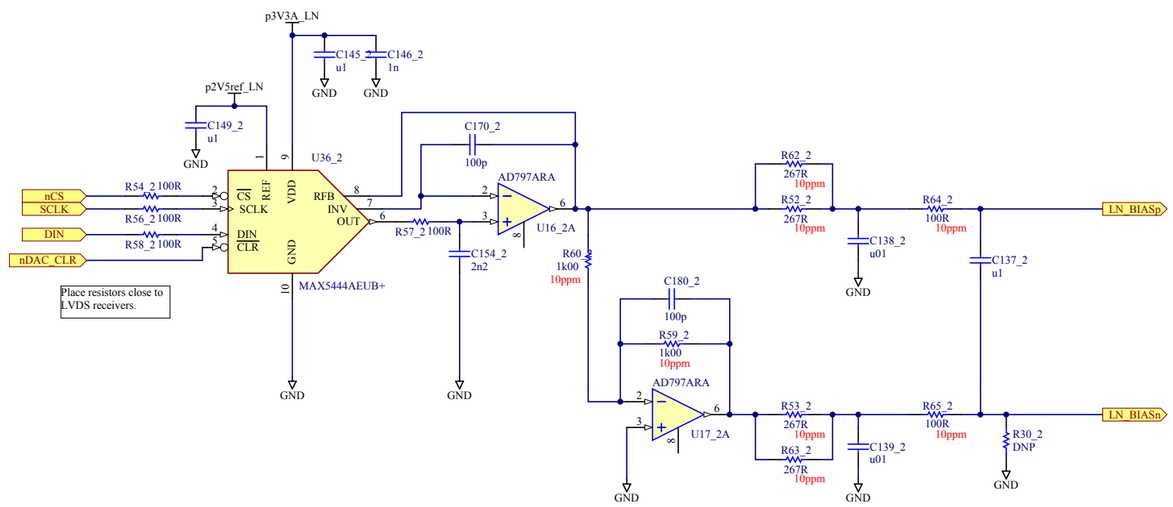

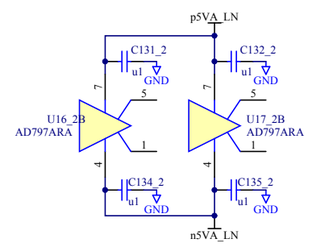

Schematic Valid For: [No Variations]

Title: *MCE Bias Card*			**University of British Columbia** *Department of Physics & Astronomy MCE Project 6224 Agricultural Road Vancouver BC V6T 1Z1 Canada*
Size: C	Number: ELE-C583-101	Revision: F issue 0	
Date: 2010-07-08 Time: 11:34:22 AM		Sheet 8 of 12	
File: BC_Low_Noise_Bias_Channel.SCHDOC			

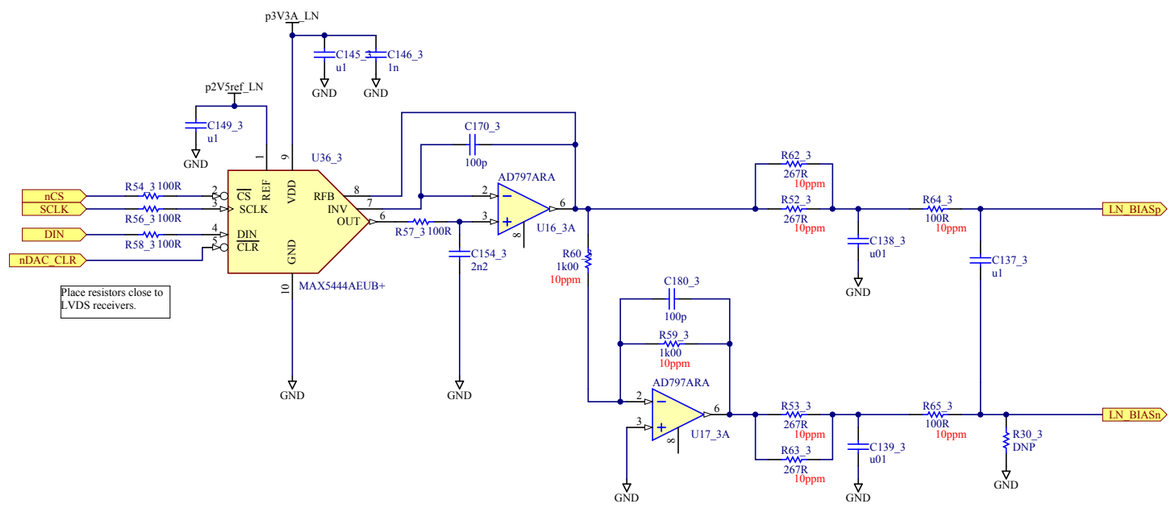

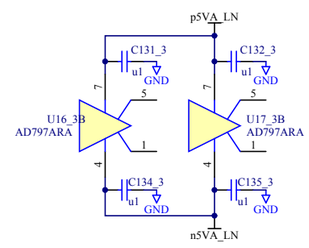

Schematic Valid For: [No Variations]

Title: *MCE Bias Card*			**University of British Columbia** *Department of Physics & Astronomy MCE Project 6224 Agricultural Road Vancouver BC V6T 1Z1 Canada*
Size: C	Number: ELE-C583-101	Revision: F issue 0	
Date: 2010-07-08 Time: 11:34:22 AM		Sheet 8 of 12	
File: BC_Low_Noise_Bias_Channel.SCHDOC			

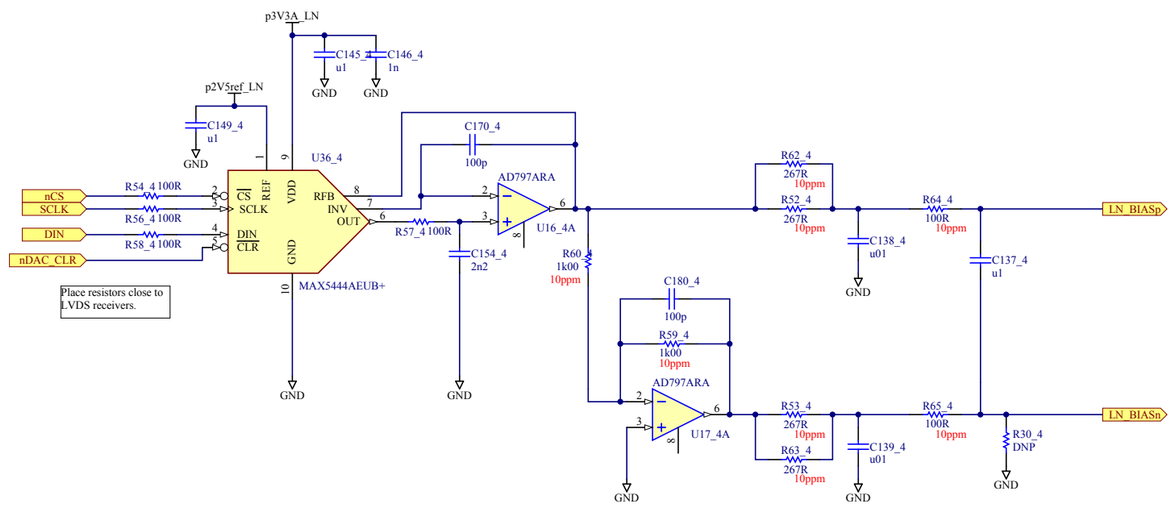

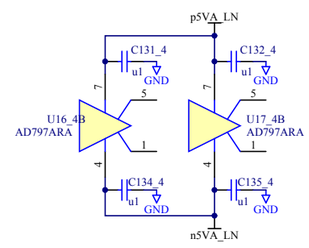

Schematic Valid For: [No Variations]

Title: *MCE Bias Card*			**University of British Columbia** *Department of Physics & Astronomy MCE Project 6224 Agricultural Road Vancouver BC V6T 1Z1 Canada*
Size: C	Number: ELE-C583-101	Revision: F issue 0	
Date: 2010-07-08 Time: 11:34:23 AM		Sheet 8 of 12	
File: BC_Low_Noise_Bias_Channel.SCHDOC			

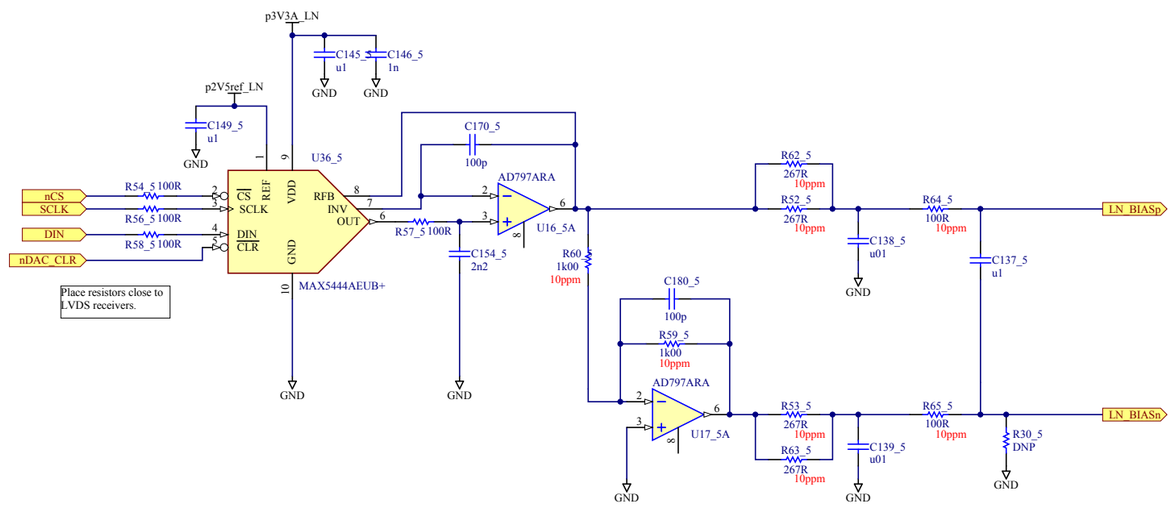

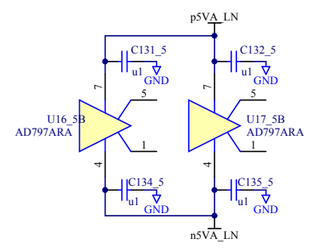

Schematic Valid For: [No Variations]

Title: *MCE Bias Card*			**University of British Columbia** *Department of Physics & Astronomy MCE Project 6224 Agricultural Road Vancouver BC V6T 1Z1 Canada*
Size: C	Number: ELE-C583-101	Revision: F issue 0	
Date: 2010-07-08 Time: 11:34:23 AM		Sheet 8 of 12	
File: BC_Low_Noise_Bias_Channel.SCHDOC			

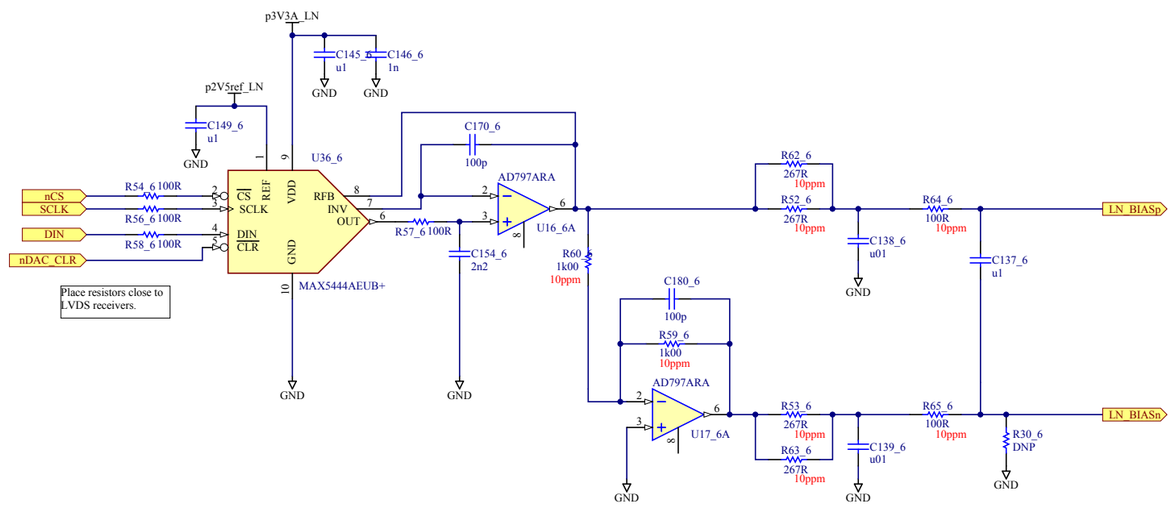

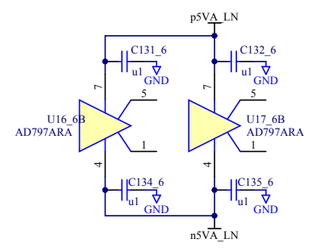

Schematic Valid For: [No Variations]

Title: *MCE Bias Card*			**University of British Columbia** *Department of Physics & Astronomy MCE Project 6224 Agricultural Road Vancouver BC V6T 1Z1 Canada*
Size: C	Number: ELE-C583-101	Revision: F issue 0	
Date: 2010-07-08 Time: 11:34:23 AM		Sheet 8 of 12	
File: BC_Low_Noise_Bias_Channel.SCHDOC			

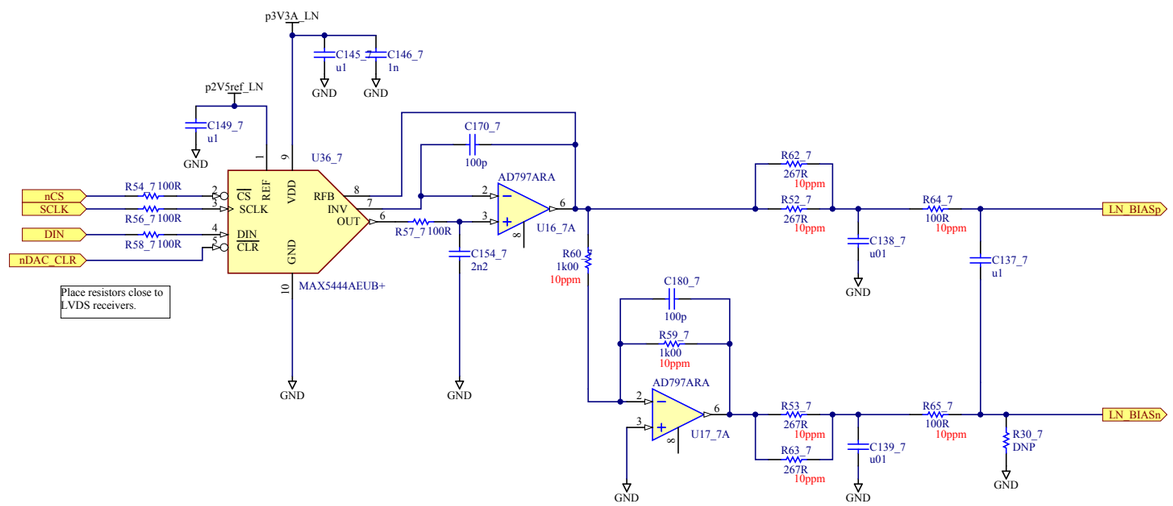

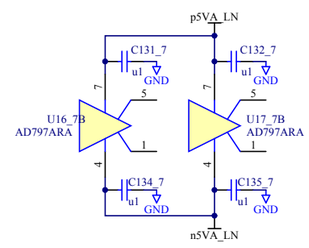

Schematic Valid For: [No Variations]

Title: *MCE Bias Card*			**University of British Columbia** *Department of Physics & Astronomy MCE Project 6224 Agricultural Road Vancouver BC V6T 1Z1 Canada*
Size: C	Number: ELE-C583-101	Revision: F issue 0	
Date: 2010-07-08 Time: 11:34:24 AM		Sheet 8 of 12	
File: BC_Low_Noise_Bias_Channel.SCHDOC			

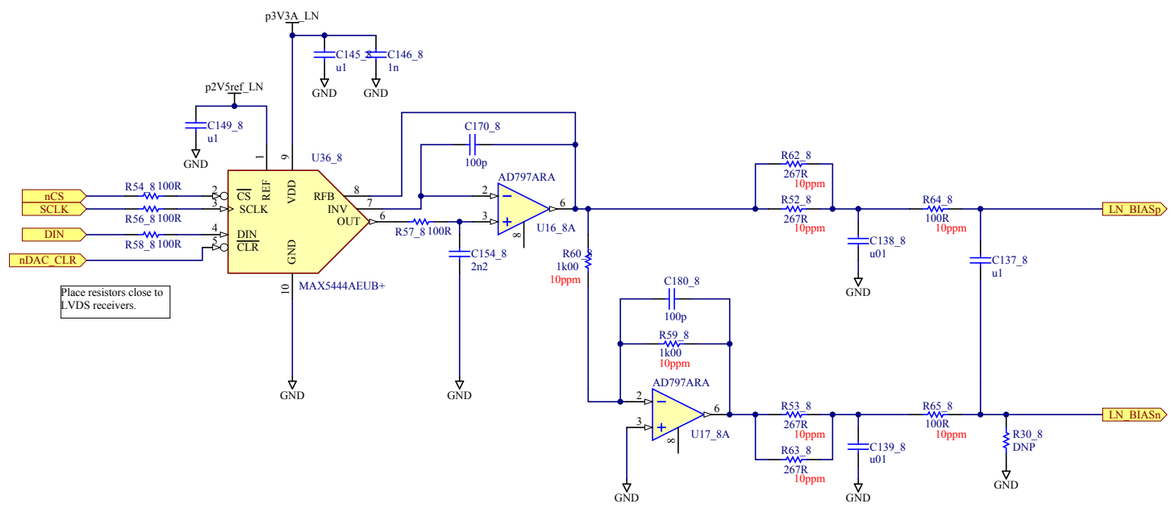

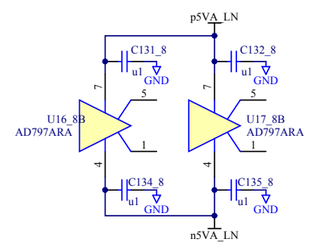

Schematic Valid For: [No Variations]

Title: *MCE Bias Card*			**University of British Columbia** *Department of Physics & Astronomy MCE Project 6224 Agricultural Road Vancouver BC V6T 1Z1 Canada*
Size: C	Number: ELE-C583-101	Revision: F issue 0	
Date: 2010-07-08 Time: 11:34:24 AM		Sheet 8 of 12	
File: BC_Low_Noise_Bias_Channel.SCHDOC			

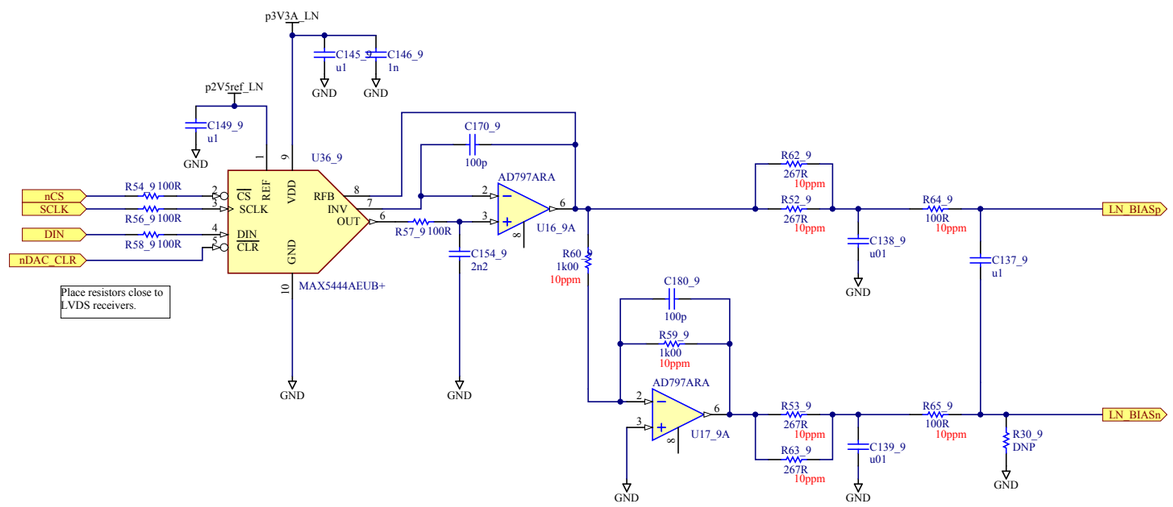

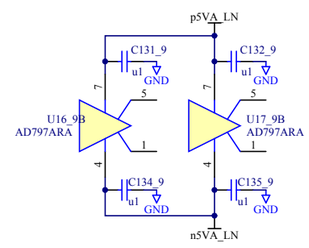

Schematic Valid For: [No Variations]

Title: *MCE Bias Card*			**University of British Columbia** *Department of Physics & Astronomy MCE Project 6224 Agricultural Road Vancouver BC V6T 1Z1 Canada*
Size: C	Number: ELE-C583-101	Revision: F issue 0	
Date: 2010-07-08 Time: 11:34:25 AM		Sheet 8 of 12	
File: BC_Low_Noise_Bias_Channel.SCHDOC			

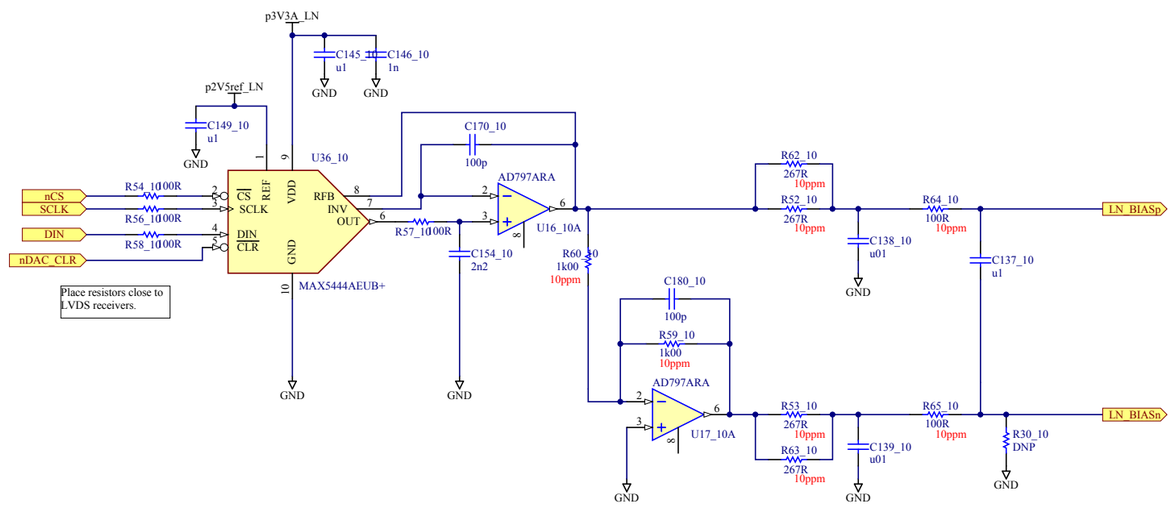

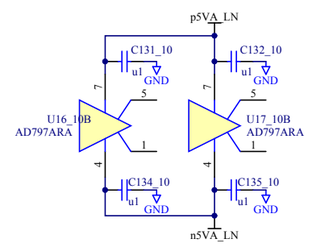

Schematic Valid For: [No Variations]

Title: *MCE Bias Card*			**University of British Columbia** *Department of Physics & Astronomy MCE Project 6224 Agricultural Road Vancouver BC V6T 1Z1 Canada*
Size: C	Number: ELE-C583-101	Revision: F issue 0	
Date: 2010-07-08 Time: 11:34:25 AM		Sheet 8 of 12	
File: BC_Low_Noise_Bias_Channel.SCHDOC			

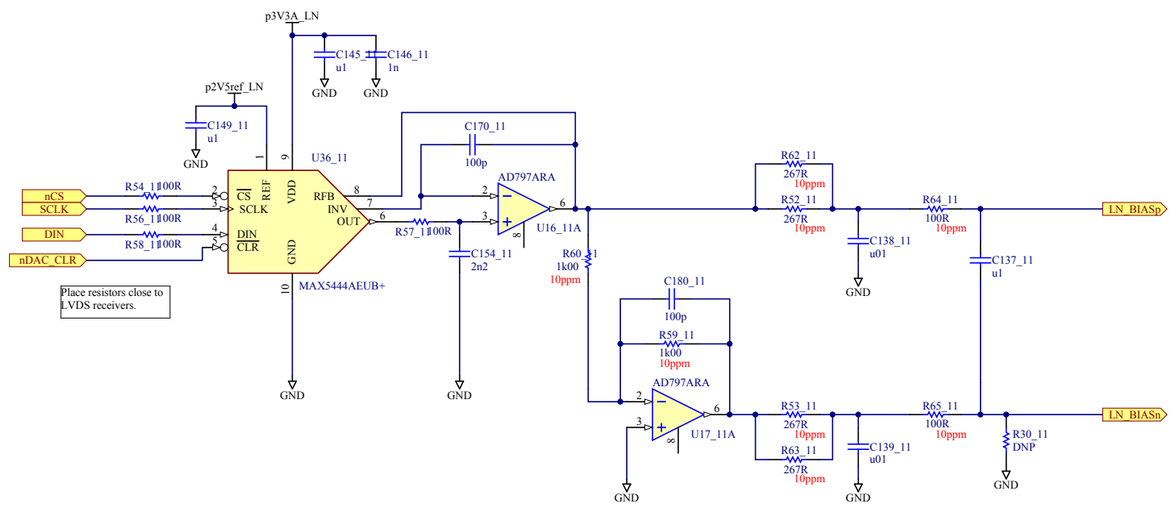

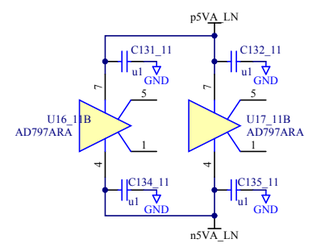

Schematic Valid For: [No Variations]

Title: *MCE Bias Card*			**University of British Columbia** *Department of Physics & Astronomy MCE Project 6224 Agricultural Road Vancouver BC V6T 1Z1 Canada*
Size: C	Number: ELE-C583-101	Revision: F issue 0	
Date: 2010-07-08 Time: 11:34:26 AM		Sheet 8 of 12	
File: BC_Low_Noise_Bias_Channel.SCHDOC			

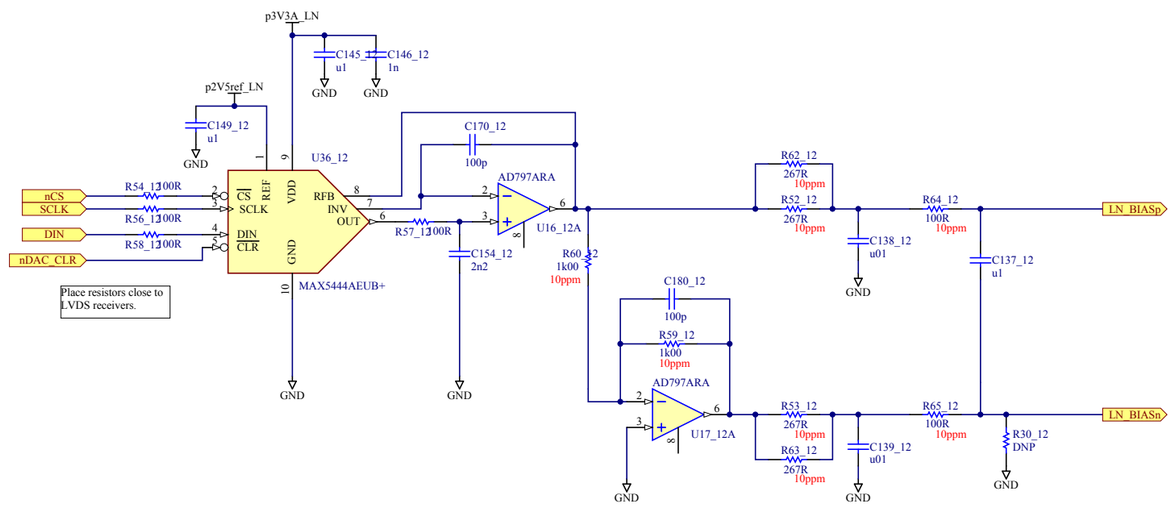

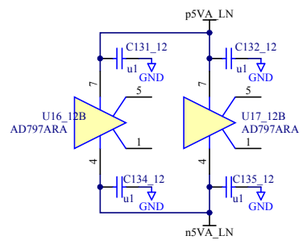

Schematic Valid For: [No Variations]

Title: *MCE Bias Card*			**University of British Columbia** *Department of Physics & Astronomy MCE Project 6224 Agricultural Road Vancouver BC V6T 1Z1 Canada*
Size: C	Number: ELE-C583-101	Revision: F issue 0	
Date: 2010-07-08 Time: 11:34:26 AM		Sheet 8 of 12	
File: BC_Low_Noise_Bias_Channel.SCHDOC			

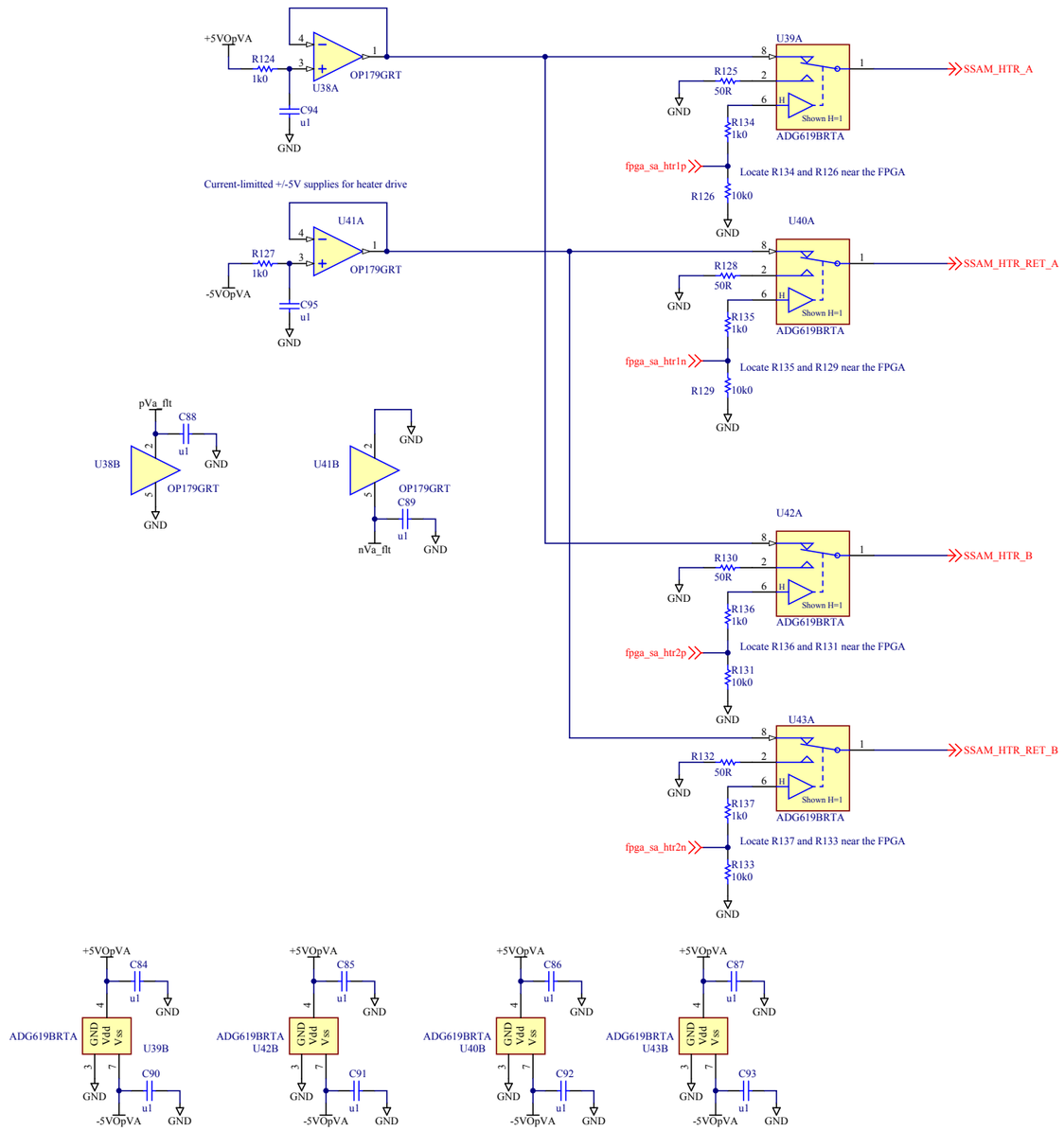

Schematic Valid For: **[No Variations]**

Title: *MCE Bias Card*			**University of British Columbia** *Department of Physics & Astronomy MCE Project 6224 Agricultural Road Vancouver BC V6T 1Z1 Canada*
Size: C	Number: ELE-C583-101	Revision: F issue 0	
Date: 2010-07-08 Time: 11:34:26 AM		Sheet 9 of 12	
File: BC_SA_Htr.SchDoc			

Front Panel Mouting Assembly

Bottom Extraction Handle
Manufacturer: Rittal
Part Number: 3686-902
Mech3

Top Extraction Handle
Manufacturer: Rittal
Part Number: 3686-903
Mech4

SCUBA2 Bias Card Front Panel
Manufacturer: PHAS-MS
Part Number: SC2-ELE-S583-110
Mech8

Mounting Bracket for PCB
Manufacturer: Rittal
Part Number: 3685-198 (10/pack)
Mech11

Mounting Bracket for PCB
Manufacturer: Rittal
Part Number: 3685-198 (10/pack)
Mech12

M2.5 x 10mm Machine Screw
Type: Hardware
Manufacturer: Pacific Fastener
Part Number:
Mech15

M2.5 x 10mm Machine Screw
Type: Hardware
Manufacturer: Pacific Fastener
Part Number:
Mech16

M2.5 x 10mm Machine Screw
Type: Hardware
Manufacturer: Pacific Fastener
Part Number:
Mech19

M2.5 x 10mm Machine Screw
Type: Hardware
Manufacturer: Pacific Fastener
Part Number:
Mech20

M2.5 x 10mm Machine Screw
Type: Hardware
Manufacturer: Pacific Fastener
Part Number:
Mech21

M2.5 x 10mm Machine Screw
Type: Hardware
Manufacturer: Pacific Fastener
Part Number:
Mech22

PCB Part Number for BOM: ELE-C583-101F

Schematic Valid For: **[No Variations]**

Title *MCE Bias Card*			University of British Columbia *Department of Physics & Astronomy* *MCE Project* *6224 Agricultural Road* *Vancouver BC V6T 1Z1 Canada*
Size: C	Number: ELE-C583-101	Revision: F issue 0	
Date: 2010-07-08 Time: 11:34:26 AM		Sheet 11 of 12	
File: BC_Mechanical.SchDoc			